REFRIGERATION

STUDY COURSE
for Home Appliances

UNDERSTANDING:

- *REFRIGERATION COMPONENTS and CHECKING PROCEDURES*

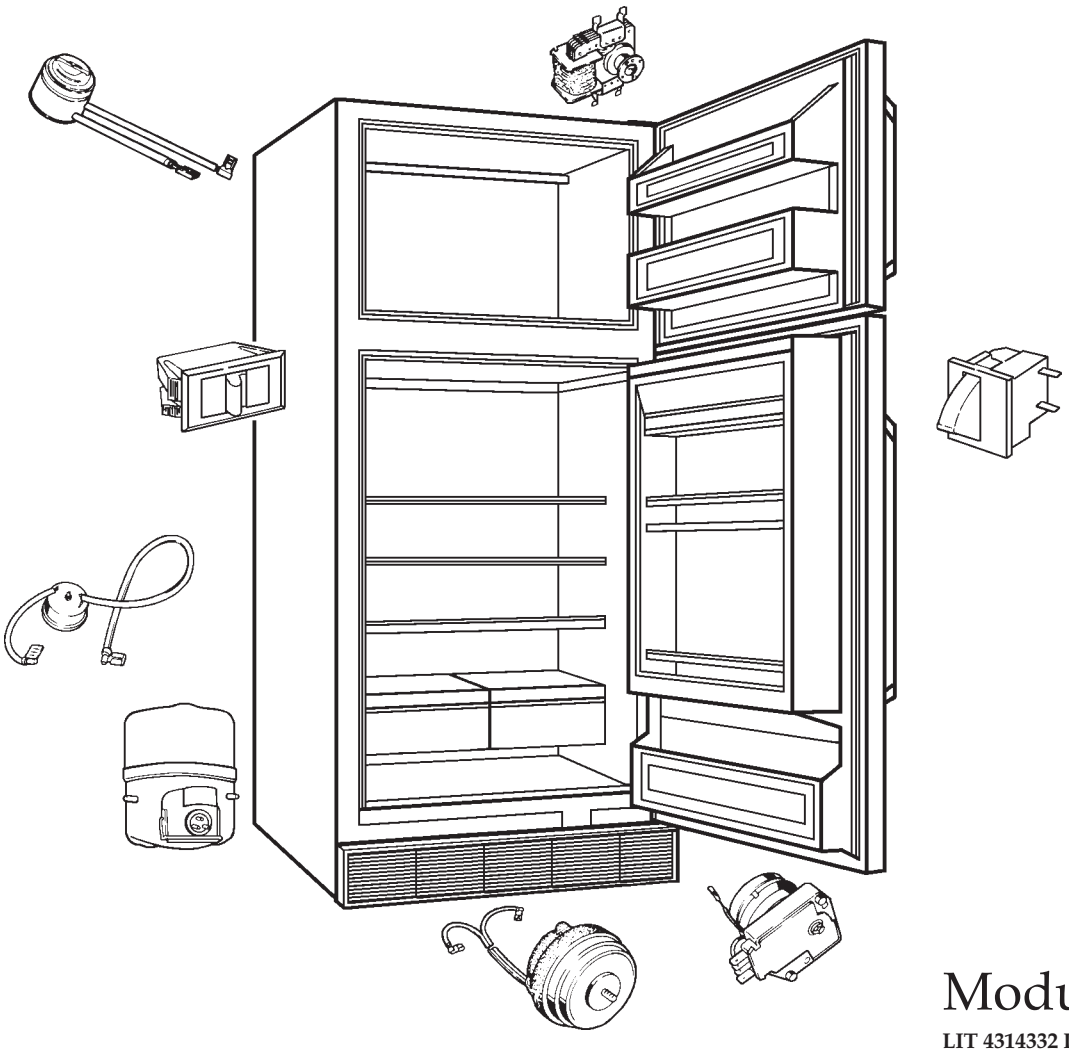

Module 2

LIT 4314332 Rev. C

For More Appliance Troubleshooting, Repair Help, & DIY Videos
Visit
ApplianceAssistant.com

WHIRLPOOL CORPORATION does not assume any responsibility or any liability in connection with the use of this manual.

INTRODUCTION

The material presented in this module is intended to provide you with an understanding of the fundamentals of refrigeration servicing.

Major appliances have become more sophisticated, taking them out of the screwdriver and pliers category. Their electrical circuits include several different types of automatic controls, switches, heaters, valves, etc.. Semiconductors, solid-state controls, and other components usually associated with radio and television electronic circuits, are being engineered into automatic washers, dryers, dishwashers and refrigerators.

The appliance technician is emerging into a professional status of his own. He must prepare himself now to be able to perform his duties today as well as to retain his professionalism in the future.

No longer is on-the-job training sufficient to prepare technicians for the complicated procedures required for todays sophisticated appliances. This training can best be obtained through organized classroom study and application. However, much of the knowledge necessary to service todays appliances can be obtained through study courses. Completion of this and other courses will provide you with sufficient understanding of appliances and their operation to enable you to do minor service. It will also serve as a valuable stepping stone to more advanced study and on-the-job training to improve your servicing skills.

Information contained in this module is used on WHIRLPOOL® appliances.

TABLE of CONTENTS

****NOTE:** We recommend taking the TEST for MODULE 2, right after studying it.*

CHAPTER 1

ELECTRICAL COMPONENTS

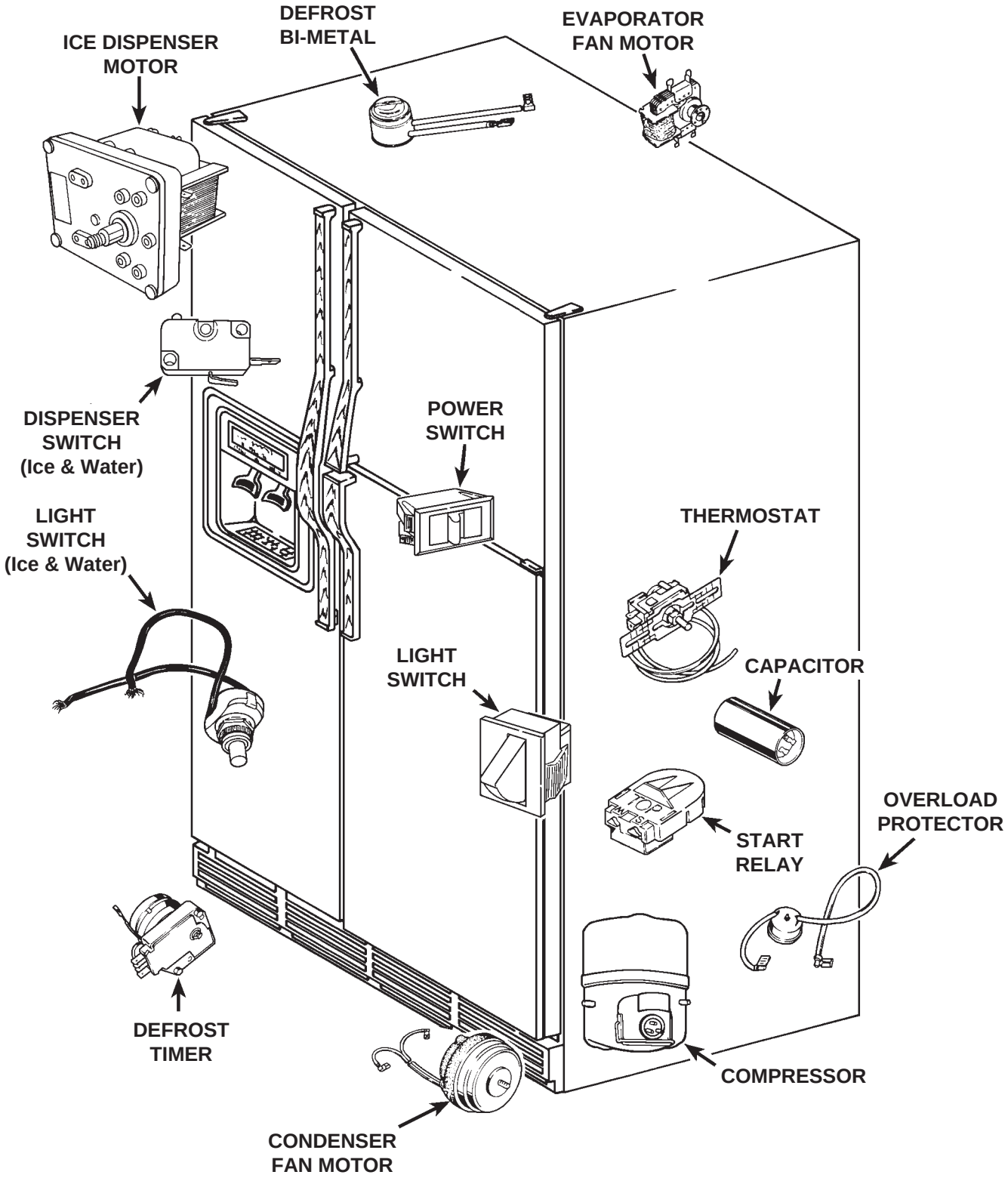

COMPRESSOR

This compressor is located at the bottom and in the back of the refrigerator. It acts as a pump forcing refrigerant to flow through the sealed system.

CHECKING PROCEDURE

Obtain an ohmmeter from your local store. We will be doing RESISTANCE checks. This is the safest way because the refrigerator is unplugged from the power source and avoids the possibility of receiving an electrical shock.

Step 1 Set the ohmmeter scale to the lowest ohms setting and ZERO the meter. See the instructions that came with your ohmmeter.

Step 2 Remove one wire at a time, carefully labeling each wire according to the terminal marking on the compressor. This procedure should assure that the right wire is reconnected to the right terminal after checking or replacing.

Step 3 Touch and hold one ohmmeter probe to the C (common) terminal.

Step 4 Touch the other ohmmeter probe to the M (run) terminal.

Step 5 The ohmmeter should show a reading between 1-10 ohms on the ohms scale. If not, the compressor is bad and needs replacing.

OR

Step 6 Touch and hold one ohmmeter probe to the C (common) terminal.

Step 7 Touch the other ohmmeter probe to the S (start) terminal.

Step 8 The ohmmeter should show a reading between 1-10 ohms on the ohms scale. If not, the compressor is bad and needs replacing.

OR

Step 9 Touch and hold one ohmmeter probe to the M (run) terminal.

Step 10 Touch the other ohmmeter probe to the S (start) terminal.

Step 11 The ohmmeter should show a reading between 1-10 ohms on the ohms scale. If not, the compressor is bad and needs replacing.

GROUNDING CHECK

Step 12 Touch and hold one ohmmeter probe to the compressor housing.

Step 13 One at a time, touch the other ohmmeter probe to terminals C (common), M (run), and S (start).

Step 14 The ohmmeter should show an open circuit when each of these terminals are touched. If not, the compressor is bad and needs replacing.

Step 15 Reconnect the wires to the proper terminals as previously marked.

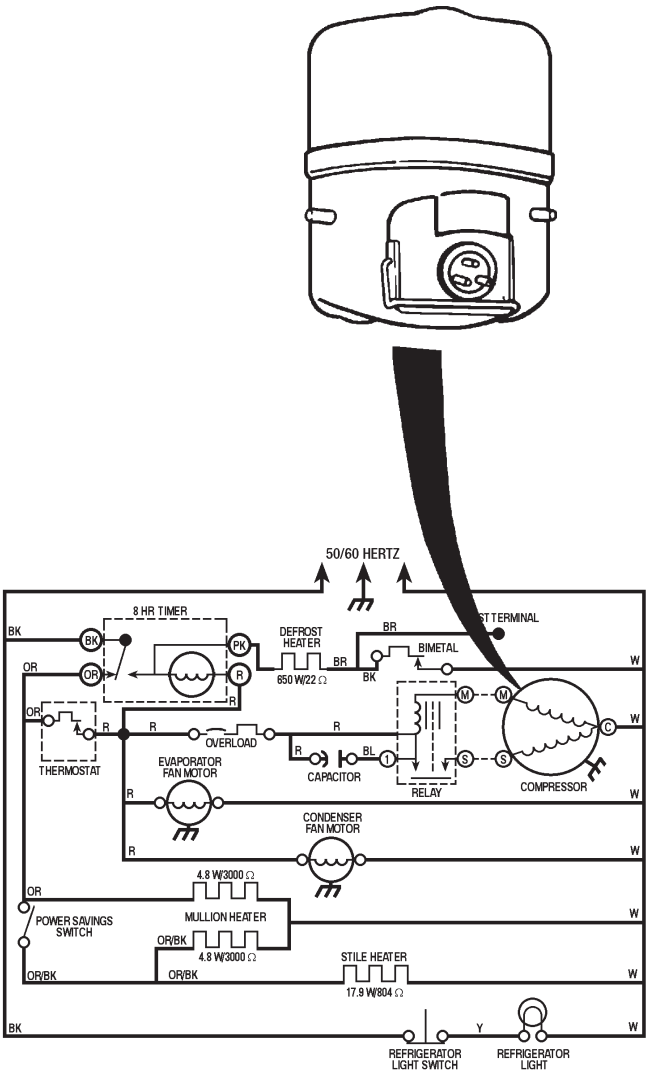

CAPACITOR

A start capacitor increases the starting torque of the compressor. Most start capacitors are located either on the frame or inside the terminal cover.

NOTE: Do a visual check first. Look at the top of the metal type capacitor to see if the top lid has bulged out or shows signs of a leak. Replace the capacitor, if you find this condition.

CHECKING PROCEDURE

Obtain an ohmmeter from your local store. We will be doing RESISTANCE checks. This is the safest way because the refrigerator is unplugged from the power source and avoids the possibility of receiving an electrical shock.

IMPORTANT: Capacitors should always be discharged prior to handling. To discharge the capacitor, use a 2-watt, 20,000-ohm resistor with insulated leads. Touch both capacitor terminals at the same time with the resistor. Must hold for 20 seconds.

Step 1 Set the ohmmeter scale to the highest ohms setting and ZERO the meter.

Step 2 Remove one wire at a time, carefully labeling each wire according to the terminal marking on the capacitor. This procedure should assure that the right wire is reconnected to the right terminal after checking or replacing.

Step 3 Touch and hold one ohmmeter probe to one of the terminals on one end of the capacitor.

NOTE: At the instant the other ohmmeter probe touches the other terminal on the capacitor, the ohmmeter needle should move instantly toward ZERO, then return slowly.

Step 4 Touch the other ohmmeter probe to the other terminal on the other end of the capacitor.

Step 5 If the ohmmeter needle stays at or near ZERO or does not move at all, the capacitor is bad and needs replacing.

Step 6 Now switch the ohmmeter probes on the capacitor terminals. The same thing should happen as in steps 3-5. If not, the capacitor is bad and needs replacing.

Step 7 Reconnect the wires to the proper terminals as previously marked.

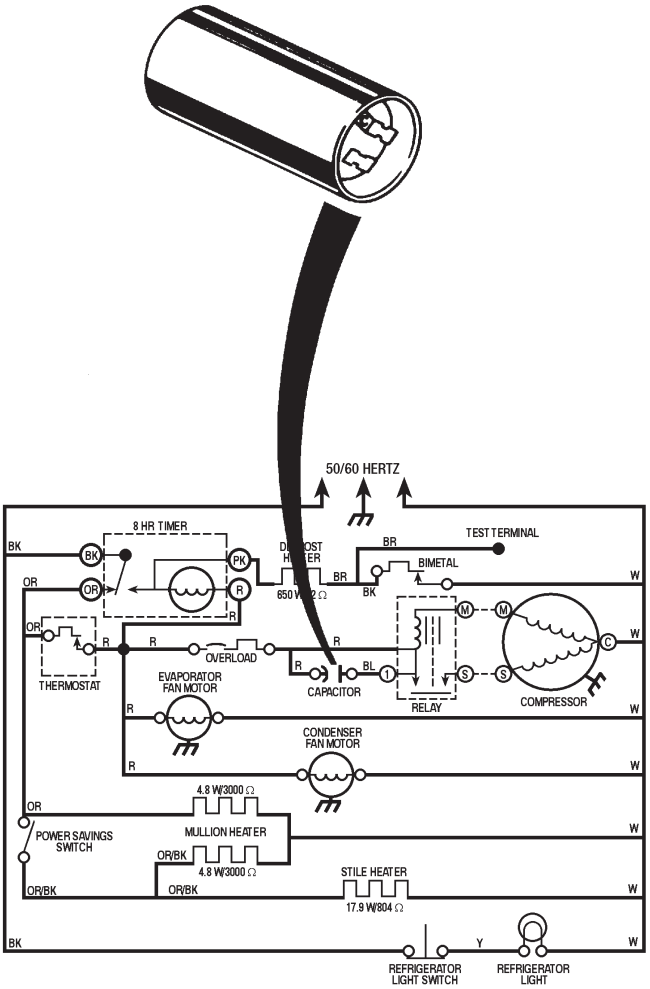

START RELAY

A start relays function is to remove voltage from the start winding. The coil part of the current type relay is connected in series with the run winding. When current flows through the coil, a magnetic force is produced, pulling the relay plunger up. With the relay plunger up, we now have electrical current through the start winding and run winding at the same time. As the motor or compressor reaches its run speed, there is not enough current flowing through the coil to keep the plunger up. As the plunger drops (because of gravity) the voltage is removed from the start winding.

On solid state relays, the internal resistance is very low, allowing current to flow through the start winding. Heat produced by the current causes the relay resistance to increase which stops current flow through the start winding.

CHECKING PROCEDURE

Obtain an ohmmeter from your local store. We will be doing RESISTANCE checks. This is the safest way because the refrigerator is unplugged from the power source and avoids the possibility of receiving an electrical shock.

Step 1 Set the ohmmeter scale to the lowest ohms setting and ZERO the meter.

Step 2 Remove one wire at a time, carefully labeling each wire according to the terminal marking on the start relay. This procedure should assure that the right wire is reconnected to the right terminal after checking or replacing.

NOTE: Make sure the start relay with the word "TOP" is up.

All current-operated relays must be used with an overload protector.

Step 3 Place and hold one ohmmeter probe in the terminal marked M (run side).

Step 4 Place the other ohmmeter probe into the terminal marked S (start side).

Step 5 The ohmmeter should show an open circuit. If not, the start relay is bad and needs replacing.

OR

Step 6 Place and hold one ohmmeter probe in the terminal marked M (run side).

Step 7 Touch the other ohmmeter probe to the terminal on the out side.

Step 8 The ohmmeter should show ZERO resistance (continuity). If not, the start relay is bad and needs replacing.

OR

Step 9 Place and hold one ohmmeter probe in the terminal marked S (start side).

Step 10 Touch the other ohmmeter probe to the terminal on the out side.

Step 11 The ohmmeter should show an open circuit. If not, the start relay is bad and needs replacing.

OR

Step 12 Turn the start relay upside down.

Step 13 Place and hold one ohmmeter probe in the terminal marked M (run side).

Step 14 Place the other ohmmeter probe in the terminal marked S (start side).

Step 15 The ohmmeter should show ZERO resistance (continuity). If not, the start relay is bad and needs replacing.

NOTE: Remember to have the word *TOP* up when reinstalling.

Step 16 Reconnect the wires to the proper terminals as previously marked.

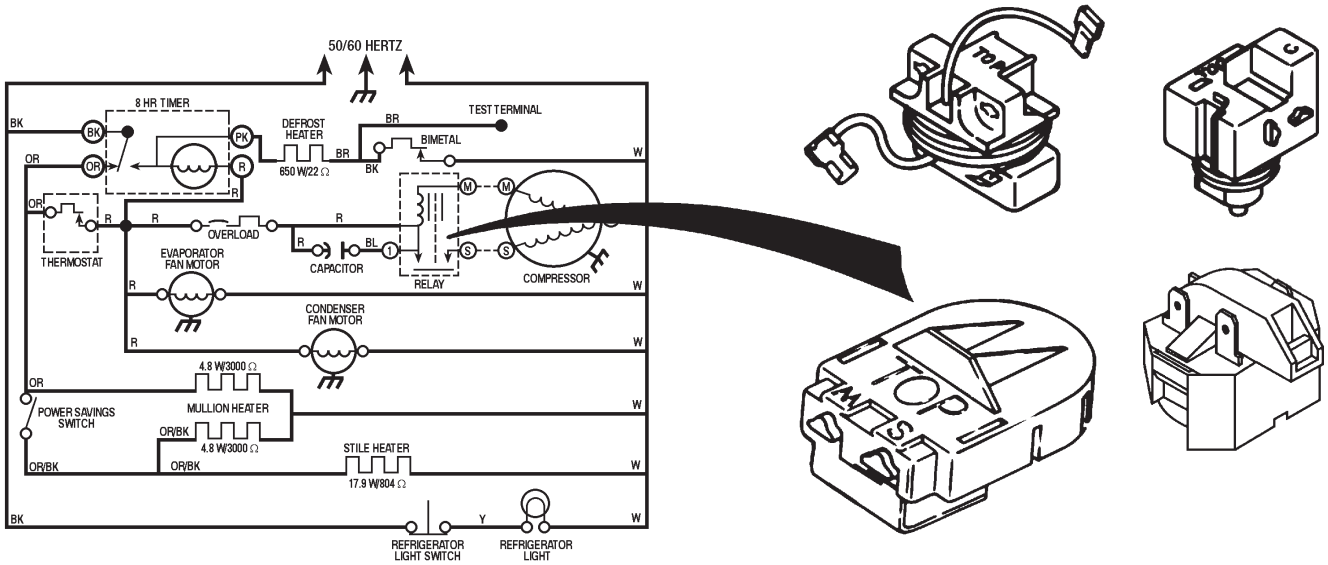

OVERLOAD PROTECTOR

This overload protects the compressor. If the compressor gets too hot the overload opens because of heat and stops the compressor. Once it has cooled the overload contacts close. It may be necessary to remove the overload from the hot compressor to let it cool off.

This overload could be held by a spring to the side of the compressor or mounted inside the terminal cover.

CHECKING PROCEDURE

Obtain an ohmmeter from your local store. We will be doing RESISTANCE checks. This is the safest way because the refrigerator is unplugged from the power source and avoids the possibility of receiving an electrical shock.

Step 1 Set the ohmmeter scale to the lowest ohms setting and ZERO the meter.

Step 2 Remove one wire at a time, carefully labeling each wire according to the terminal marking on the overload protector and/or junction box. This procedure should assure that the right wire is reconnected to the right terminal after checking or replacing.

Step 3 Touch and hold one ohmmeter probe to one of the terminals at the end of the wire.

Step 4 Touch the other ohmmeter probe to the other terminal on the other wire.

Step 5 The ohmmeter should show ZERO resistance (continuity). If not, the overload protector is bad and needs replacing.

Step 6 Reconnect the wires to the proper terminals as previously marked.

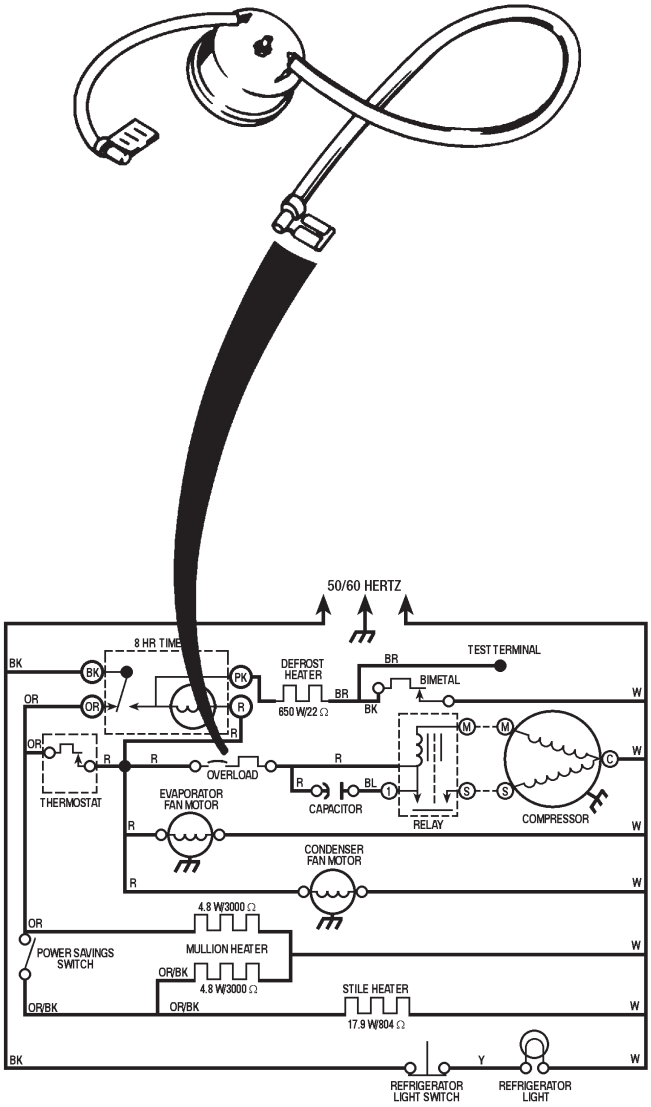

CONDENSER FAN MOTOR

This condenser fan motor is used to pull air across the condenser to cool it.

CHECKING PROCEDURE

Obtain an ohmmeter from your local store. We will be doing RESISTANCE checks. This is the safest way because the refrigerator is unplugged from the power source and avoids the possibility of receiving an electrical shock.

Step 1 Set the ohmmeter scale to the lowest ohms setting and ZERO the meter.

Step 2 Remove one wire at a time, carefully labeling each wire according to the terminal marking on the condenser fan motor. This procedure should assure that the right wire is reconnected to the right terminal after checking or replacing.

Step 3 Touch and hold one ohmmeter probe to one of the wire terminals.

Step 4 Touch the other ohmmeter probe to the other wire terminal.

Step 5 The ohmmeter should show a reading between 80-120 ohms on the ohms scale. If not, the condenser fan motor is bad and needs replacing.

Step 6 Reconnect the wires to the proper terminals as previously marked.

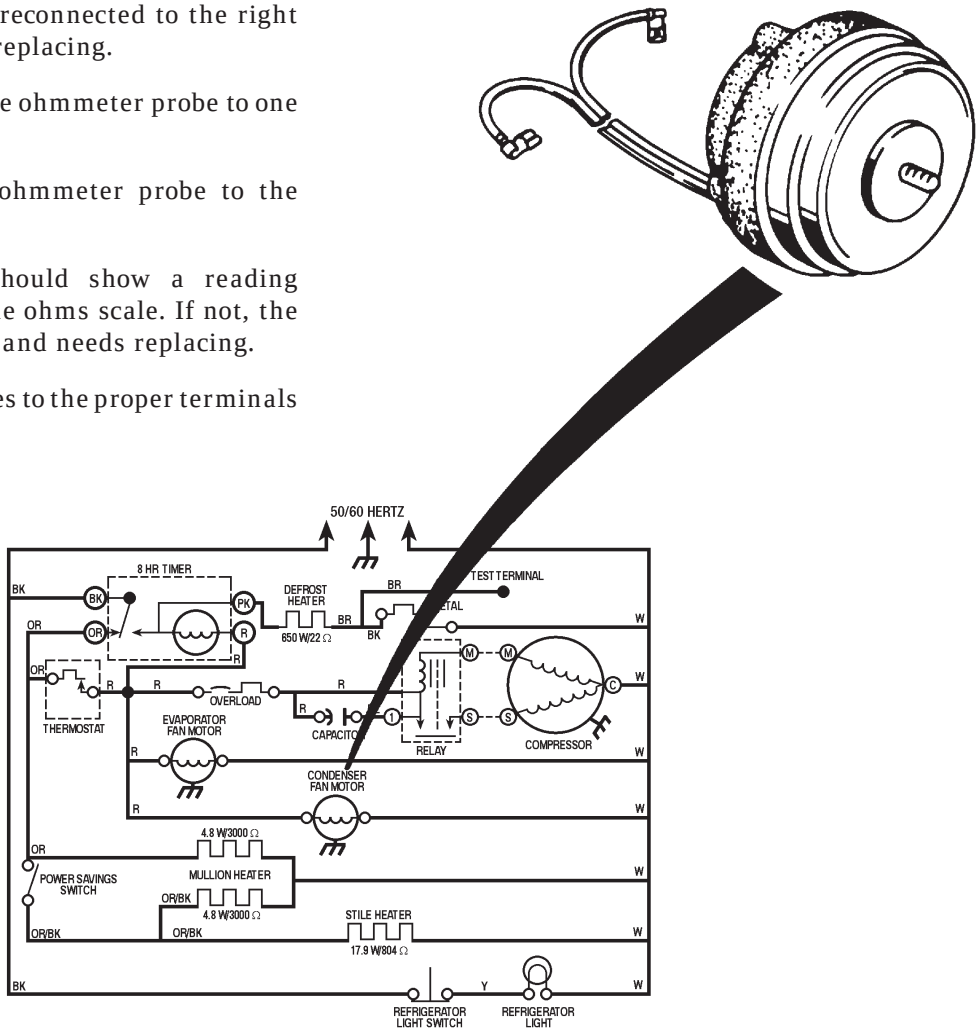

EVAPORATOR FAN MOTOR

This evaporator fan motor is located in the freezer section behind the evaporator cover and fan scroll. This motor and fan blade force air through the freezer and refrigerator.

CHECKING PROCEDURE

Obtain an ohmmeter from your local store. We will be doing RESISTANCE checks. This is the safest way because the refrigerator is unplugged from the power source and avoids the possibility of receiving an electrical shock.

Step 1 Set the ohmmeter scale to the lowest ohms setting and ZERO the meter.

Step 2 Remove one wire at a time, carefully labeling each wire according to the terminal marking on the evaporator fan motor. This procedure should assure that the right wire is reconnected to the right terminal after checking or replacing.

Step 3 Touch and hold one ohmmeter probe to one of the terminals coming from the motor coil.

Step 4 Touch the other ohmmeter probe to the other terminal coming from the motor coil.

Step 5 The ohmmeter should show a reading between 30-60 ohms on the ohms scale. If not, the evaporator fan motor is bad and needs replacing.

Step 6 Reconnect the wires to the proper terminals as previously marked.

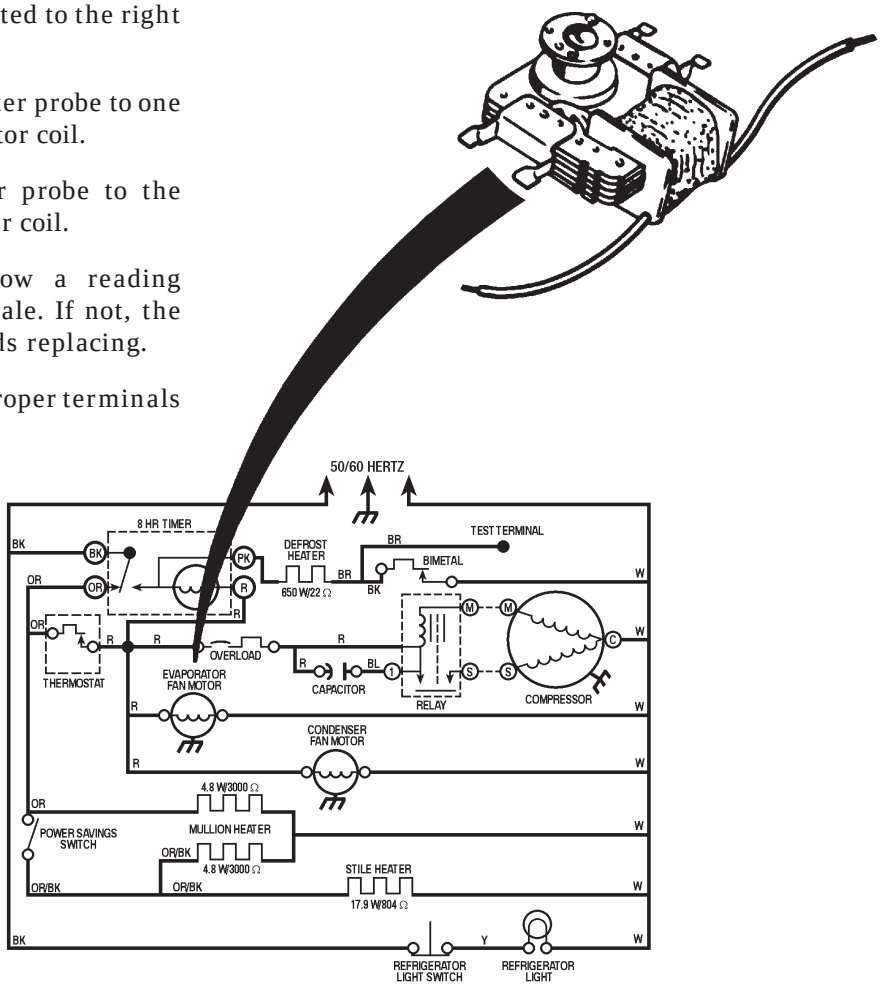

POWER SWITCH

The purpose of this switch lets you adjust for weather conditions. If moisture (water) shows on the outside walls of your refrigerator turn the switch to ON or DAMP. Be sure to turn the switch back to OFF or DRY when the weather changes.

This switch could be located in one of three places; in the back, on the side, or in the top front.

CHECKING PROCEDURE

Obtain an ohmmeter from your local store. We will be doing RESISTANCE checks. This is the safest way because the refrigerator is unplugged from the power source and avoids the possibility of receiving an electrical shock.

Step 1 Set the ohmmeter scale to the lowest ohms setting and ZERO the meter.

Step 2 Remove one wire at a time, carefully labeling each wire according to the terminal marking on the power switch. This procedure should assure that the right wire is reconnected to the right terminal after checking or replacing.

NOTE: Switch button in the "OFF", "DRY", "SAVES POWER" or "CONSUMES LESS ENERGY" position.

Step 3 Touch and hold one ohmmeter probe to one of the terminals on the switch.

Step 4 Touch the other ohmmeter probe to the other terminal on the switch.

Step 5 The ohmmeter should show an open circuit. If not, the power switch is bad and needs replacing.

NOTE: Switch button in the "ON", "DAMP", or "REDUCES EXTERIOR MOISTURE" position.

Step 6 Touch and hold one ohmmeter probe to one of the terminals on the switch.

Step 7 Touch the other ohmmeter probe to the other terminal on the switch.

Step 8 The ohmmeter should show ZERO resistance (continuity) If not, the power switch is bad and needs replacing.

Step 9 Reconnect the wires to the proper terminals as previously marked.

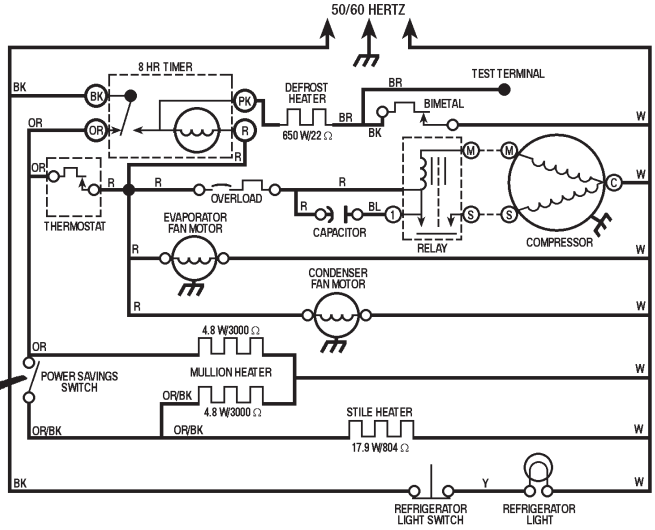

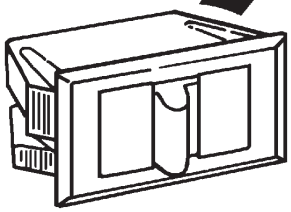

LIGHT SWITCH (INTERIOR)

This slide button type light switch could be located on the top or side breaker trim, or in the front mounted control panel. When the door is opened, the button is released and the light comes on. When the door is closed, the button is depressed and the light goes off.

CHECKING PROCEDURE

Obtain an ohmmeter from your local store. We will be doing RESISTANCE checks. This is the safest way because the refrigerator is unplugged from the power source and avoids the possibility of receiving an electrical shock.

Step 1 Set the ohmmeter scale to the lowest ohms setting and ZERO the meter.

Step 2 Remove one wire at a time, carefully labeling each wire according to the terminal marking on the light switch. This procedure should assure that the right wire is reconnected to the right terminal after checking or replacing.

Step 3 Touch and hold one ohmmeter probe to one of the terminals.

Step 4 Touch the other ohmmeter probe to the other terminal.

Step 5 The ohmmeter should show an open circuit with the door closed and show ZERO resistance (continuity) with the door opened. If not, the light switch is bad and needs replacing.

Step 6 Reconnect the wires to the proper terminals as previously marked.

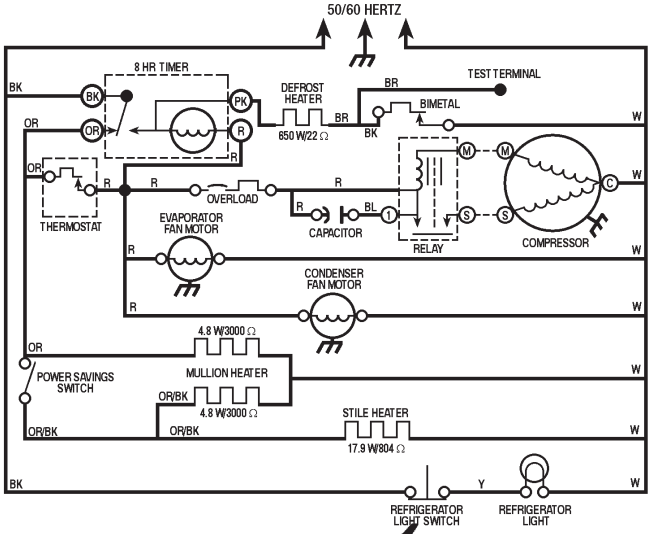

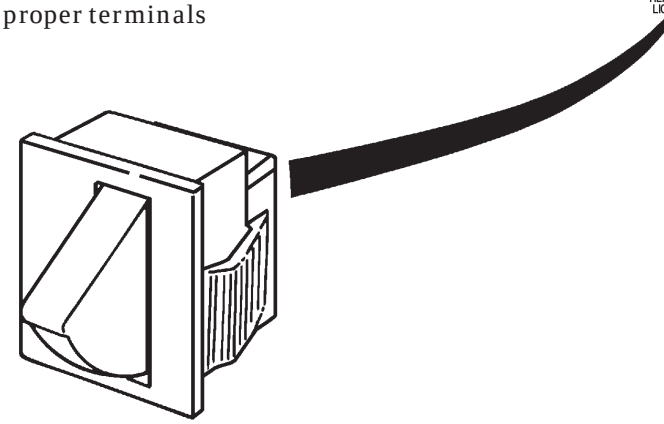

THERMOSTAT

This thermostat is located either in the back, front or side, behind the control panel and senses the coldness in the refrigerator. This thermostat then turns the compressor ON or OFF.

NOTE: Thermostat bulb routing is very important to the operation of the thermostat. All thermostat bulbs sense the coldest spot. BE SURE to make note of the routing before removing the thermostat.

CHECKING PROCEDURE

Obtain an ohmmeter from your local store. We will be doing RESISTANCE checks. This is the safest way because the refrigerator is unplugged from the power source and avoids the possibility of receiving an electrical shock.

Step 1 Set the ohmmeter scale to the lowest ohms setting and ZERO the meter.

Step 2 Remove one wire at a time, carefully labeling each wire according to the terminal marking on the thermostat. This procedure should assure that the right wire is reconnected to the right terminal after checking or replacing.

NOTE: This test (steps 3-7) will tell you if the thermostat is turning the compressor ON.

Step 3 Turn the thermostat to the warmest position.

Step 4 Touch and hold one ohmmeter probe to one of the terminals.

Step 5 Touch the other ohmmeter probe to the other terminal.

Step 6 Place your hand around the thermostat bulb for about 2-3 minutes.

Step 7 The ohmmeter should show ZERO resistance (continuity). If not, the thermostat is bad and needs replacing.

OR

Step 8 Turn the thermostat to the OFF position.

Step 9 Touch and hold one ohmmeter probe to one of the terminals.

Step 10 Touch the other ohmmeter probe to the other terminal.

Step 11 The ohmmeter should show an open circuit. If not, then the thermostat is bad and needs replacing.

Step 12 Reconnect the wires to the proper terminals as previously marked.

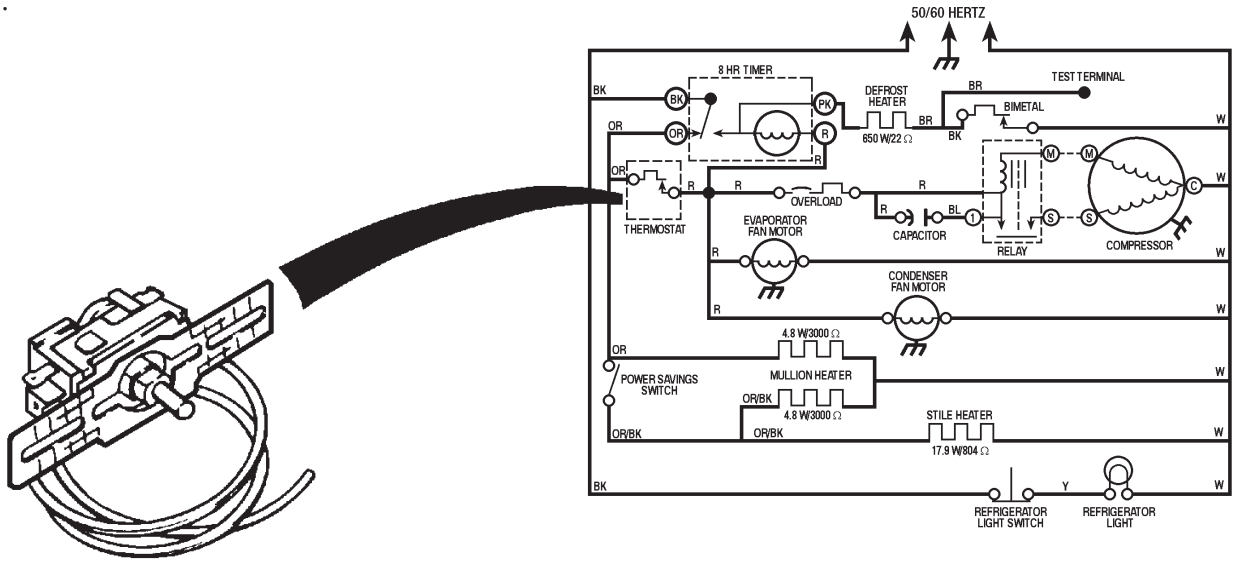

MULLION HEATER

This part is located behind the mullion (center) rail, separating the freezer and refrigerator sections. Its purpose is to prevent sweating between the freezer and refrigerator doors.

CHECKING PROCEDURE

Obtain an ohmmeter from your local store. We will be doing RESISTANCE checks. This is the safest way because the refrigerator is unplugged from the power source and avoids the possibility of receiving an electrical shock.

Step 1 Refer to the instructions that came with your ohmmeter to find the proper scale to measure 1,000-4,000 ohms. Set the ohmmeter scale and ZERO the meter.

Step 2 Remove the wire connectors, then untwist one wire at a time, carefully labeling each wire according to the location or wire(s) they are connected to. This procedure should assure that the right wires are reconnected properly after checking or replacing.

Step 3 Touch and hold one of the ohmmeter probes to the white wire coming from the mullion heater (right side).

Step 4 Touch the other ohmmeter probe to one of the orange wires coming from the mullion heater (left side).

Step 5 The ohmmeter should show a reading between 1,000-4,000 ohms on the ohms scale. If not, the mullion heater is bad and needs replacing.

OR

Step 6 Touch and hold one of the ohmmeter probes to the white wire coming from the mullion heater (right side).

Step 7 Touch the other ohmmeter probe to the other orange wire coming from the mullion heater (left side).

Step 8 The ohmmeter should show a reading between 1,000-4,000 ohms on the ohms scale. If not, the mullion heater is bad and needs replacing.

Step 9 Reconnect the wires to the other wires as previously marked.

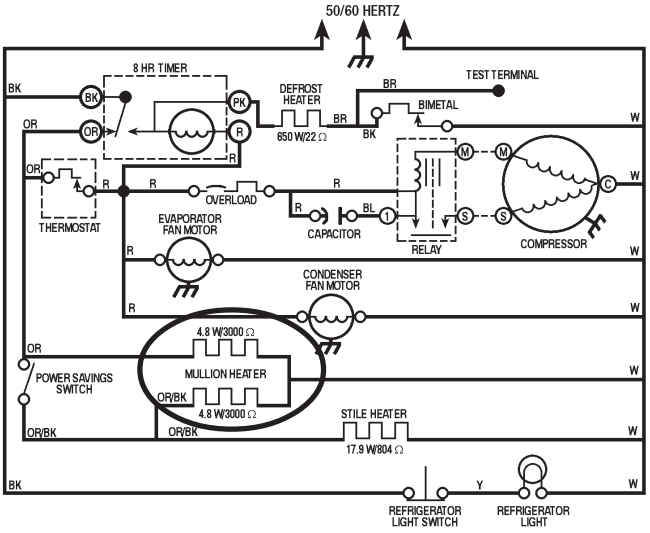

STILE HEATER

This part goes behind the front flange of the cabinet and around the freezer section. Its purpose is to prevent sweating around the outside of the freezer door opening.

CHECKING PROCEDURE

Obtain an ohmmeter from your local store. We will be doing RESISTANCE checks. This is the safest way because the refrigerator is unplugged from the power source and avoids the possibility of receiving an electrical shock.

Step 1 Refer to the instructions that came with your ohmmeter to find the proper scale to measure 1,000-4,000 ohms. Set the ohmmeter scale and ZERO the meter.

Step 2 Remove the wire connectors, then untwist one wire at a time, carefully labeling each wire according to the location or wire(s) they are connected to. This procedure should assure that the right wires are reconnected properly after checking or replacing.

Step 3 Touch and hold one of the ohmmeter probes to the white wire coming out of the foam.

Step 4 Touch the other ohmmeter probe to the orange with black tracer wire coming out of the foam on the other side.

Step 5 The ohmmeter should show a reading between 1,000-4,000 ohms on the ohms scale. If not, the stile heater is bad and needs replacing.

Step 6 Reconnect the wires to the other wires as previously marked.

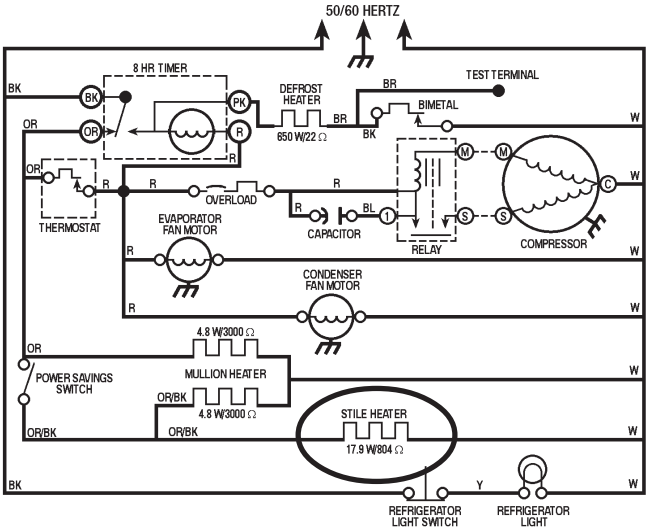

DEFROST BIMETAL

This part is located on the evaporator or the back of the liner and is used during the defrost cycle. This bimetal senses the temperature from the evaporator. When the temperature reaches 50°-70° degrees (F) the defrost bimetal opens, turning the defrost heater Off.

CHECKING PROCEDURE

Obtain an ohmmeter from your local store. We will be doing RESISTANCE checks. This is the safest way because the refrigerator is unplugged from the power source and avoids the possibility of receiving an electrical shock.

Step 1 Set the ohmmeter scale to the lowest ohms setting and ZERO the meter.

Step 2 Remove one wire at a time, carefully labeling each wire according to the location or terminal marking on the defrost bimetal. This procedure should assure that the right wire is reconnected to the right terminal after checking or replacing.

NOTE: The defrost bimetal must be on a cold evaporator or liner for this test.

Step 3 Touch and hold one ohmmeter probe to one of the wire terminals.

Step 4 Touch the other ohmmeter probe to the other wire terminal.

Step 5 The ohmmeter should show ZERO resistance (continuity). If not, the defrost bimetal is bad and needs replacing.

OR

NOTE: The defrost bimetal must be warm for this test. Run hot water over the bimetal but not on the wires or terminals.

Step 6 Touch and hold one ohmmeter probe to one of the wire terminals.

Step 7 Touch the other ohmmeter probe to the other wire terminal.

Step 8 The ohmmeter should show an open circuit. If not, the defrost bimetal is bad and needs replacing.

Step 9 Reconnect the wires to the proper terminals as previously marked.

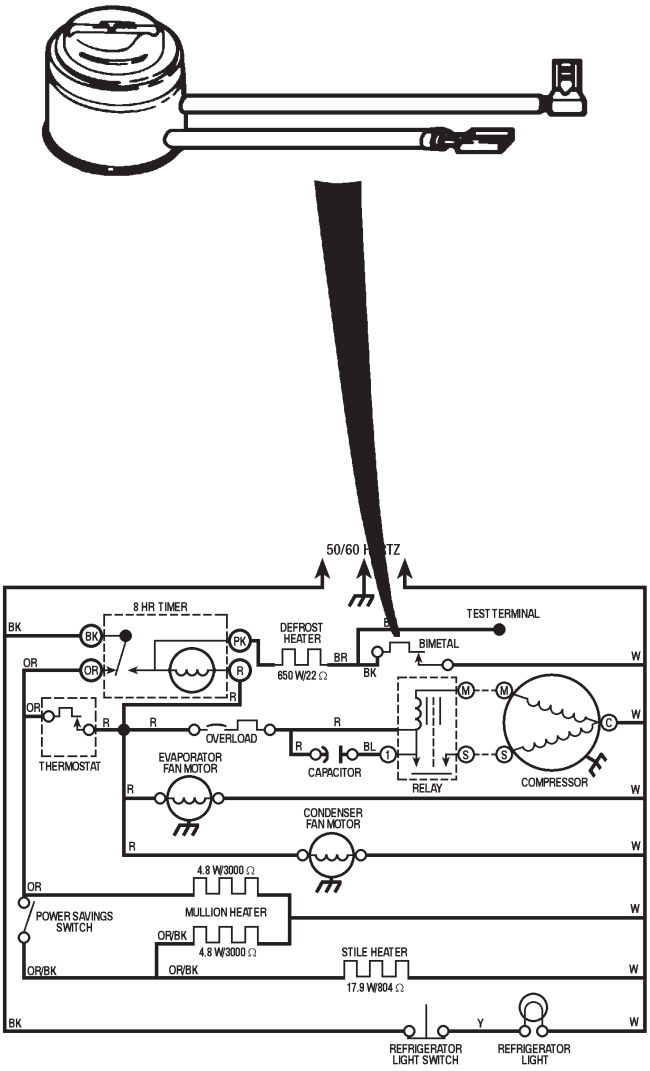

DEFROST TIMER

There are two types of defrost timers used today, they are: (1) continuous run and (2) compressor run.

Continuous run means, when the refrigerator is plugged in, the defrost timer runs all the time up to 8 or 12 hours (depending on your model) then it will go into defrost. Defrost lasts no more then 21 minutes, then it will recycle and start refrigeration again.

Compressor run means, when the compressor is running and the defrost bimetal is closed, the defrost timer is running. When the compressor stops the defrost timer stops. When the compressor runs up to 6 or 10 hours (depending on your model) the defrost timer will go into defrost. Defrost lasts no more then 21 minutes, then it will recycle and start refrigeration again.

This defrost timer could be located either in the back or front behind the control panel or behind the front grill.

CHECKING PROCEDURE

Obtain an ohmmeter from your local store. We will be doing RESISTANCE checks. This is the safest way because the refrigerator is unplugged from the power source and avoids the possibility of receiving an electrical shock.

Step 1 Set the ohmmeter scale to the lowest ohms setting and ZERO the meter.

Step 2 Remove the disconnect block from the defrost timer by pulling apart or remove one wire at a time, carefully labeling each wire according to the location or terminal marking on the defrost heater. This procedure should assure that the right wire is reconnected to the right terminal after checking or replacing.

REFRIGERATION CYCLE

Step 3 Touch and hold one ohmmeter probe to the terminal BK.

Step 4 Touch the other ohmmeter probe to the terminal OR.

NOTE: Leave both of the ohmmeter probes on these terminals.

Step 5 Using a putty knife, turn the knob to the right (clockwise) very slowly.

Step 6 The ohmmeter should show ZERO resistance (continuity) as you turn the knob. If not, the defrost timer is bad and needs replacing.

Step 7 Keep turning and when you hear a click, stop.

Step 8 The ohmmeter should show an open circuit. If not, the defrost timer is bad and needs replacing.

NOTE: You are now in the defrost cycle.

DEFROST CYCLE

Step 9 Touch and hold one ohmmeter probe to the terminal BK.

Step 10 Touch the other ohmmeter probe to the terminal PK.

NOTE: Leave both of the ohmmeter probes on these terminals.

Step 11 Using a putty knife, turn the knob to the right (clockwise) very slowly.

Step 12 The ohmmeter should show ZERO resistance (continuity) as you turn the knob. If not, the defrost timer is bad and needs replacing.

Step 13 Keep turning and when you hear a click, stop.

Step 14 The ohmmeter should show an open circuit. If not, the defrost timer is bad and needs replacing.

NOTE: You are now back into the refrigeration cycle.

Step 15 Refer to the instructions that came with your ohmmeter to find the proper scale to measure 2,000-4,000 ohms. Set the ohms scale and ZERO the meter.

Step 16 Touch and hold one ohmmeter probe to the terminal PK.

Step 17 Touch the other ohmmeter probe to the terminal R.

Step 18 The ohmmeter should show a reading between 2,000-4,000 ohms on the ohms scale. If not, the defrost timer is bad and needs replacing.

Step 19 Reconnect the wires to the proper terminals as previously marked.

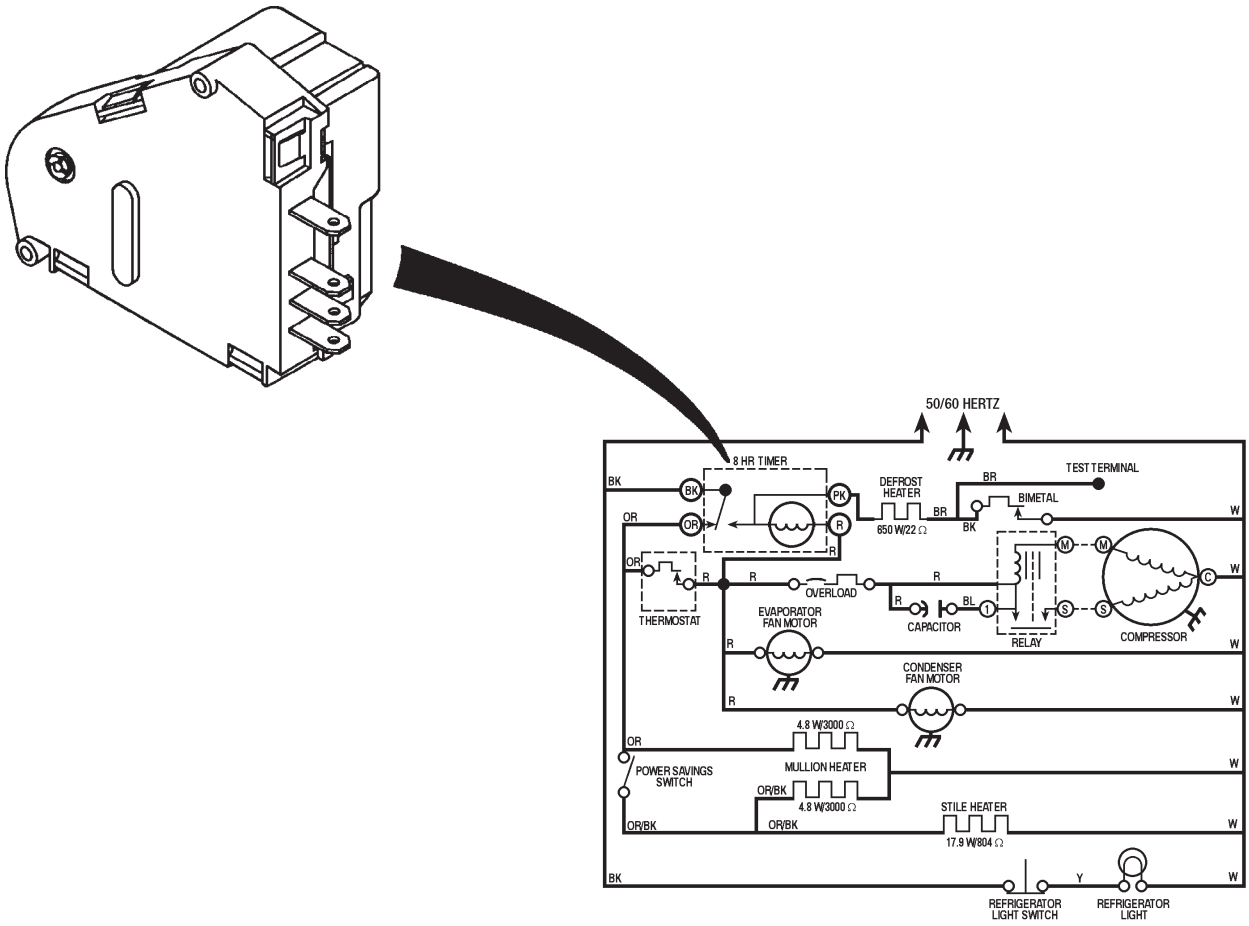

DEFROST HEATER

This part is located around the evaporator and is used during the defrost cycle. When the heater turns on, it melts the ice collected on the evaporator.

CHECKING PROCEDURE

Obtain an ohmmeter from your local store. We will be doing RESISTANCE checks. This is the safest way because the refrigerator is unplugged from the power source and avoids the possibility of receiving an electrical shock.

Step 1 Set the ohmmeter scale to the lowest ohms setting and ZERO the meter.

Step 2 Remove one wire at a time, carefully labeling each wire according to the location or terminal marking on the defrost heater. This procedure should assure that the right wire is reconnected to the right terminal after checking or replacing.

Step 3 Touch and hold one ohmmeter probe to one of the terminals.

Step 4 Touch the other ohmmeter probe to the other terminal.

Step 5 The ohmmeter should show a reading between 10-1,000 ohms on the ohms scale. If not, the defrost heater is bad and needs replacing.

Step 6 Reconnect the wires to the proper terminals as previously marked.

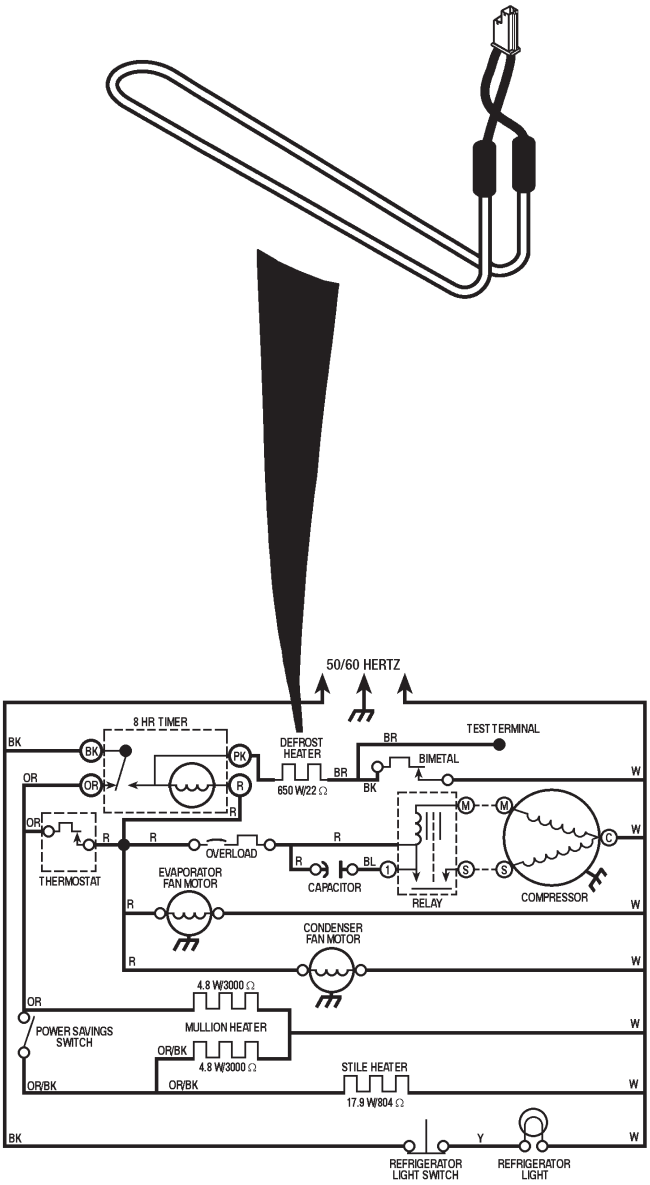

DISPENSER SWITCH (ICE & WATER)

These switches control whether the ice or water is ON or OFF.

CHECKING PROCEDURE

Obtain an ohmmeter from your local store. We will be doing RESISTANCE checks. This is the safest way because the refrigerator is unplugged from the power source and avoids the possibility of receiving an electrical shock.

Step 1 Set the ohmmeter scale to the lowest ohms setting and ZERO the meter.

Step 2 Remove one wire at a time, carefully labeling each wire according to the terminal marking on the dispenser switch. This procedure should assure that the right wire is reconnected to the right terminal after checking or replacing.

Step 3 With the button out, touch and hold one of the ohmmeter probes to one of the terminals.

Step 4 Touch the other ohmmeter probe to the other terminal.

Step 5 The ohmmeter should show an open circuit with the button out. If not, the dispenser switch is bad and needs replacing.

Step 6 With the button pressed in, touch and hold one of the ohmmeter probes to one of the terminals.

Step 7 Touch the other ohmmeter probe to the other terminal.

Step 8 The ohmmeter should show ZERO resistance (continuity). If not, the dispenser switch is bad and needs replacing.

Step 9 Reconnect the wires to the proper terminals as previously marked.

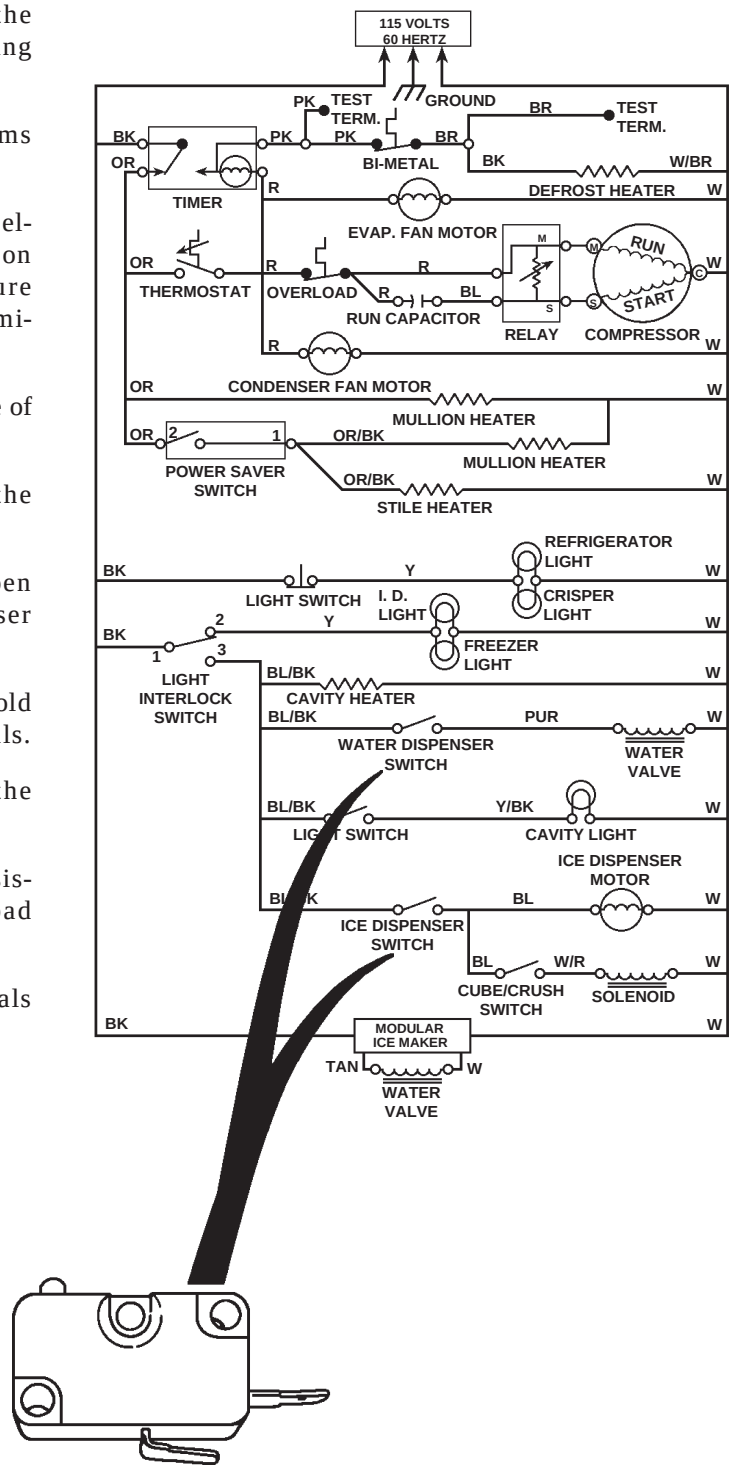

LIGHT SWITCH (ICE & WATER)

This pushbutton type light switch is located in the ice and water dispenser area and is used to turn a small light bulb ON and OFF.

CHECKING PROCEDURE

Obtain an ohmmeter from your local store. We will be doing RESISTANCE checks. This is the safest way because the refrigerator is unplugged from the power source and avoids the possibility of receiving an electrical shock.

Step 1 Set the ohmmeter scale to the lowest ohms setting and ZERO the meter.

Step 2 Remove one wire at a time, carefully labeling each wire according to the terminal marking on the light switch. This procedure should assure that the right wire is reconnected to the right terminal after checking or replacing.

Step 3 Touch and hold one ohmmeter probe to one of the light switch wires.

Step 4 Touch the other ohmmeter probe to the other light switch wire.

Step 5 Depending whether the light switch is on or off, you should show an open circuit in the off position, and 1-3 ohms in the on position. If not, the light switch is bad and needs replacing.

Step 6 Reconnect the wires to the proper terminals as previously marked.

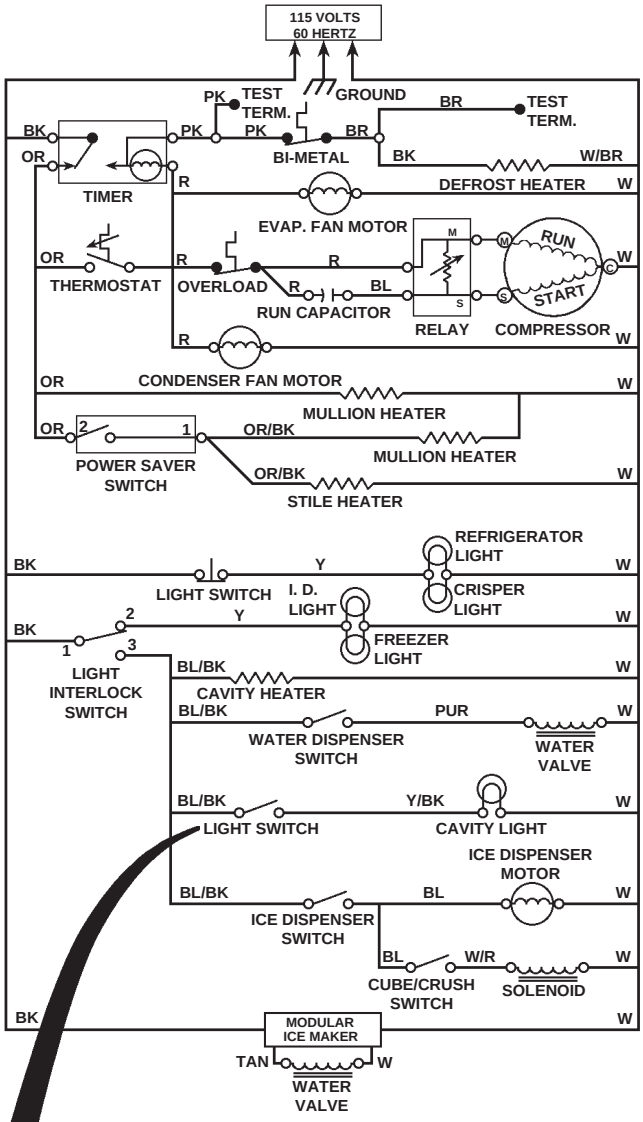

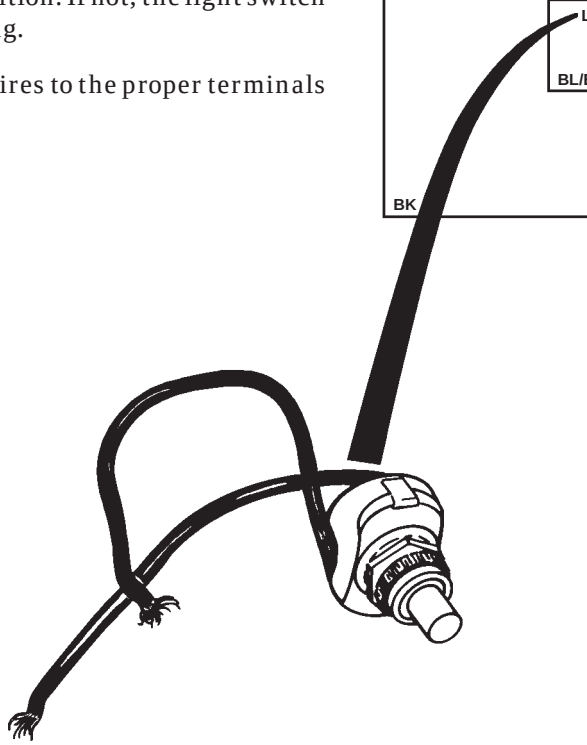

ICE DISPENSER MOTOR

This motor is located in the back of the freezer section on side by side refrigerator-freezers with the water and ice feature through the door. Its function is to drive an auger when ice is called for.

CHECKING PROCEDURE

Obtain an ohmmeter from your local store. We will be doing RESISTANCE checks. This is the safest way because the refrigerator is unplugged from the power source and avoids the possibility of receiving an electrical shock.

Step 1 Set the ohmmeter scale to the lowest ohms setting and ZERO the meter.

Step 2 Remove one wire at a time, carefully labeling each wire according to the terminal marking on the ice dispenser motor. This procedure should assure that the right wire is reconnected to the right terminal after checking or replacing.

Step 3 Touch and hold one ohmmeter probe to one of the terminals coming from the motor coil.

Step 4 Touch the other ohmmeter probe to the other terminal coming from the motor coil.

Step 5 The ohmmeter should show a reading between 1-4 ohms on the ohms scale. If not, the ice dispenser motor is bad and needs replacing.

Step 6 Reconnect the wires to the proper terminals as previously marked.

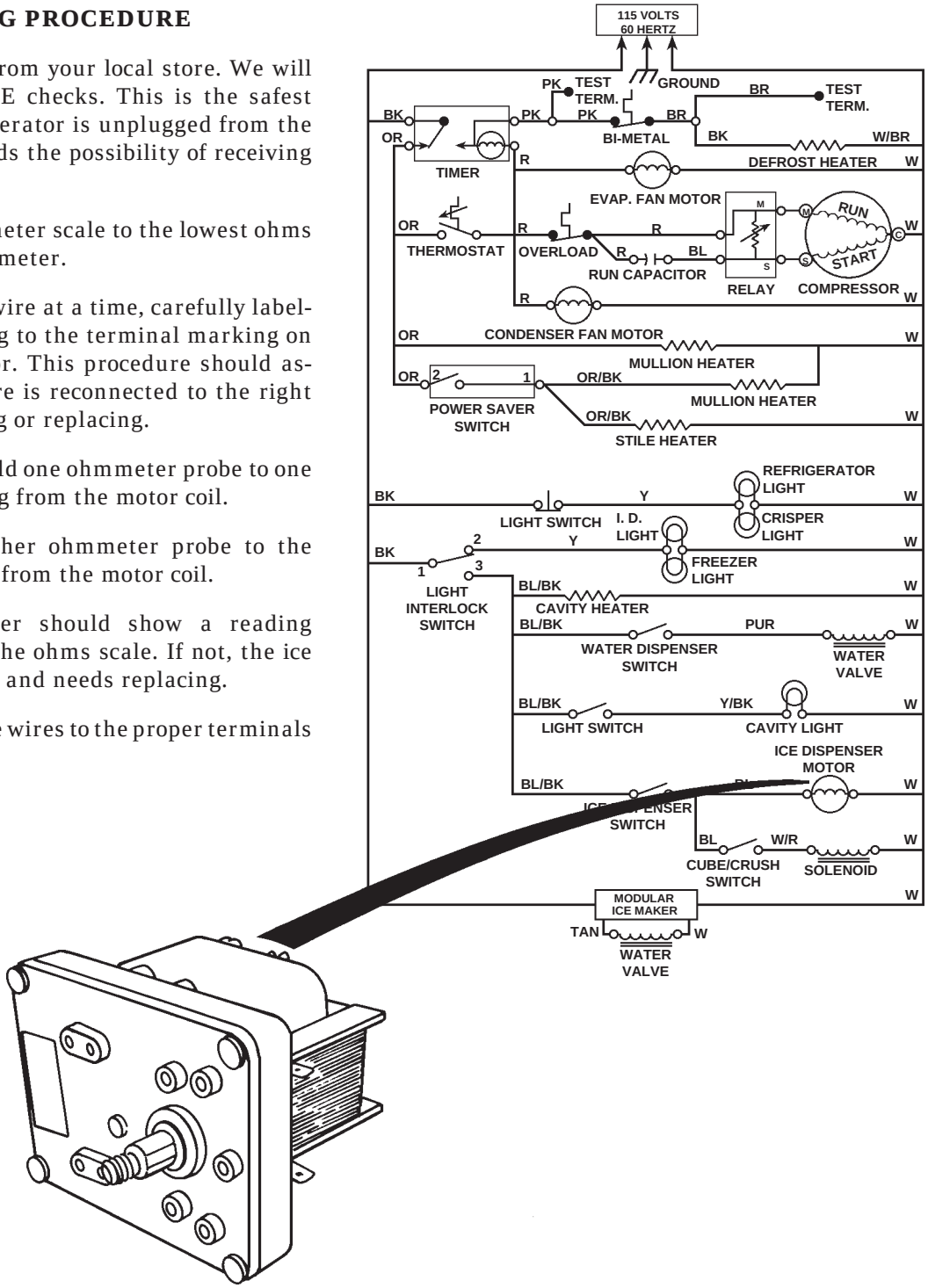

TILT ICE HEATER

This heater keeps the tilt ice housing from sweating.

CHECKING PROCEDURE

Obtain an ohmmeter from your local store. We will be doing RESISTANCE checks. This is the safest way because the refrigerator is unplugged from the power source and avoids the possibility of receiving an electrical shock.

Step 1 Refer to the instructions that came with your ohmmeter to find the proper scale to measure 2,000-2,400 ohms. Set the ohmmeter scale and ZERO the meter.

Step 2 Remove the wire connectors, then untwist one wire at a time, carefully labeling each wire according to the location or wire(s) they are connected to. This procedure should assure that the right wires are reconnected properly after checking or replacing.

Step 3 Touch and hold one of the ohmmeter probes to one of the wires from the heater.

Step 4 Touch the other ohmmeter probe to the other wire from the heater.

Step 5 The ohmmeter should show a reading between 2,000-2,400 ohms on the ohms scale. If not, the heater is bad and needs replacing.

Step 6 Reconnect the wires to the other wires as previously marked.

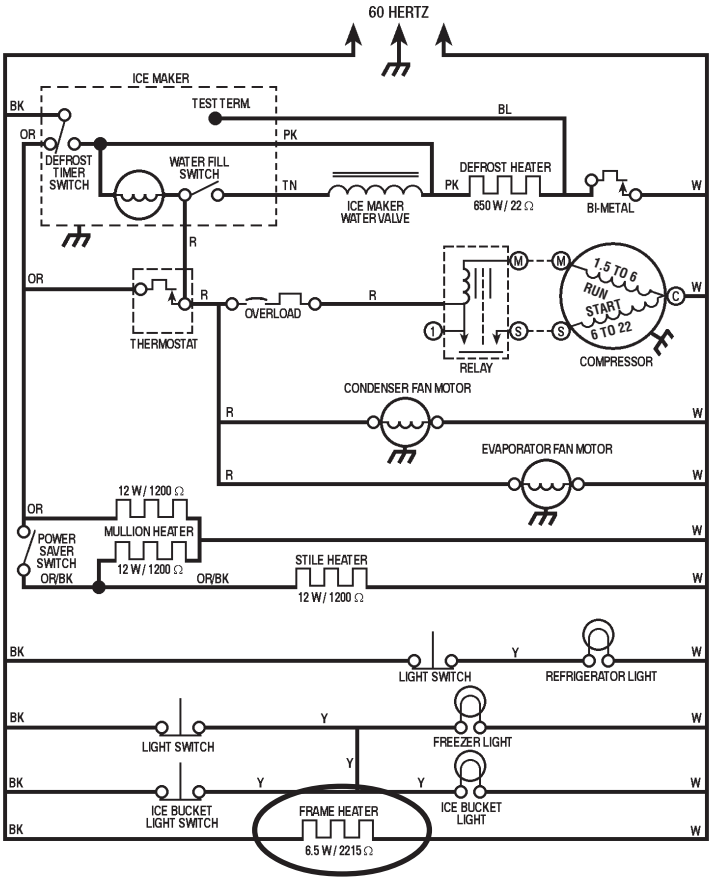

LIGHT SWITCH (TILT ICE)

This slide button type light switch is located behind the tilt ice door. When the door is opened, the button is released and the light comes on. When the door is closed, the button is depressed and the light goes off.

CHECKING PROCEDURE

Obtain an ohmmeter from your local store. We will be doing RESISTANCE checks. This is the safest way because the refrigerator is unplugged from the power source and avoids the possibility of receiving an electrical shock.

Step 1 Set the ohmmeter scale to the lowest ohms setting and ZERO the meter.

Step 2 Remove one wire at a time, carefully labeling each wire according to the terminal marking on the light switch. This procedure should assure that the right wire is reconnected to the right terminal after checking or replacing.

Step 3 Touch and hold one ohmmeter probe to one of the terminals.

Step 4 Touch the other ohmmeter probe to the other terminal.

Step 5 The ohmmeter should show an open circuit with the door closed and show ZERO resistance (continuity) with the door opened. If not, the light switch is bad and needs replacing.

Step 6 Reconnect the wires to the proper terminals as previously marked.

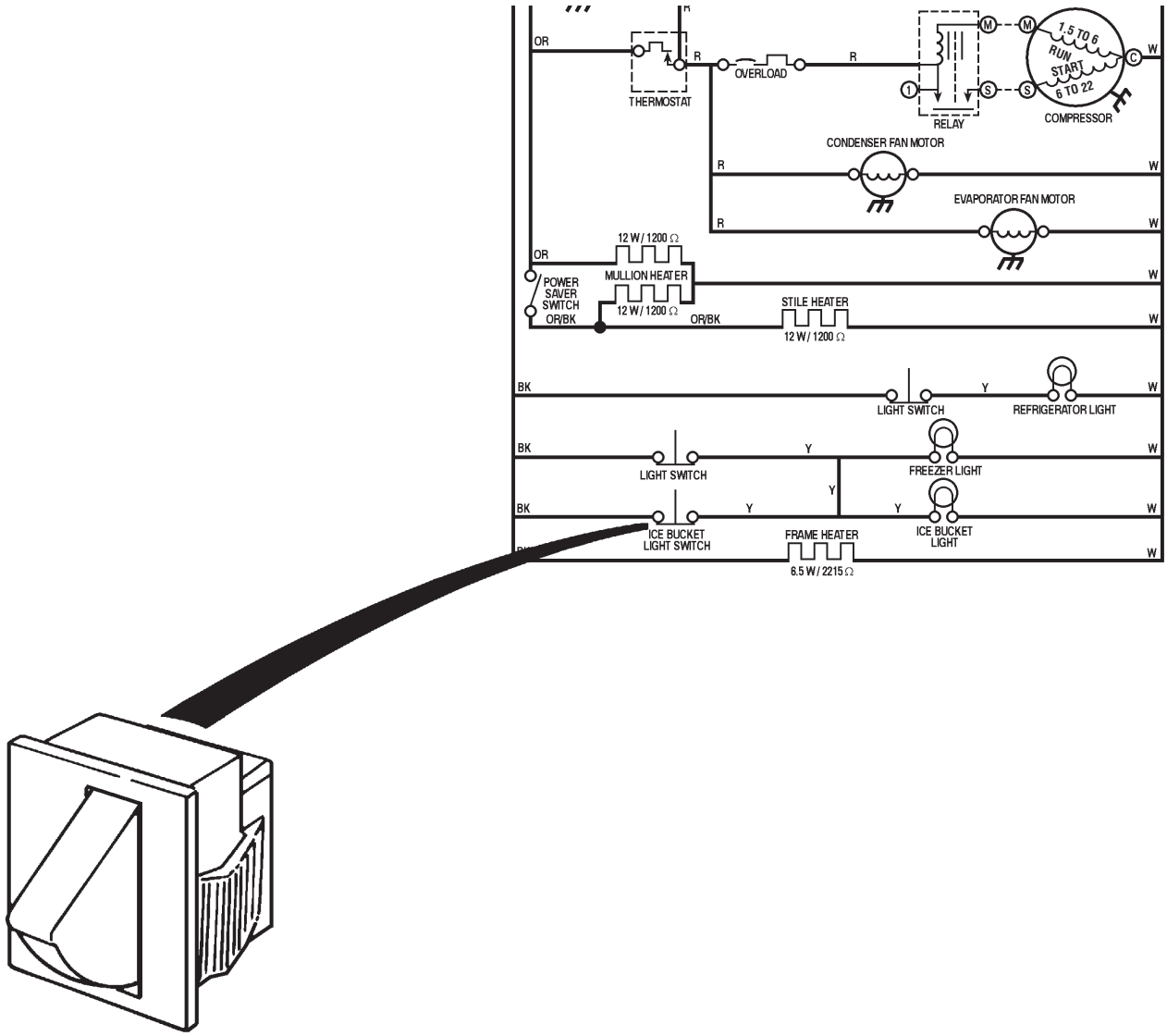

blank

blank