MAYTAG

Maytag

Washer Service Manual

16010358
(16009485)

Issued 5/99
Revised 6/01

SAFETY PRECAUTIONS

This manual, as well as the information contained in it, is to be used only by a Maytag Authorized Service Technician. They should be familiar with and knowledgeable of proper safety and servicing procedures and possessing high quality testing equipment associated with microwaves, gas, and electrical appliance repair.

All individuals who attempt repairs by improper means or adjustment subject themselves and others to the risk of serious or fatal injury.

USE ONLY GENUINE MAYTAG APPROVED FACTORY REPLACEMENT COMPONENTS.

PRECAUTIONS TO BE OBSERVED BEFORE AND DURING SERVICING TO AVOID POSSIBLE EXPOSURE TO EXCESSIVE DANGER AND ELECTRICAL SHOCK:

1. **Disconnect electrical supply before servicing machine.**
2. **If electricity is required for a test:**
   - **(A) First, disconnect electrical supply;**
   - **(B) Second, make any connections or adjustments required for the test;**
   - **(C) Third, connect electrical supply;**
   - **(D) Fourth, perform the test. If service is required, disconnect electrical supply before servicing machine.**
3. **Please use caution when servicing the machine with the front panel removed because there is danger of injury due to potential contact with spinning transmission.**
4. **Please use caution when servicing the machine with the front panel removed because there is danger of injury due to contact with a potential "pinch point" between the turned up edge of the transmission cover and the tub support flange.**

INTRODUCTION

The information presented in this manual is printed in a loose format and is divided into sections relating to a general group of components and/or service procedures. Each section is further subdivided to describe a particular component or service procedure.

Anything of a unique nature concerning these models has been detailed and labeled as such in the manual.

The subdividing of the subject matter, plus the loose leaf form will facilitate the updating of the manual as new or revised components are added or new models are introduced.

Each page of the manual will be identified in the lower right-hand corner, and as new or revised pages are published, the manual can easily be updated by following the file instructions on the cover letter of the supplement.

The service manual is a valuable tool and care should be taken to keep it up to date by prompt and proper filing of subsequent pages as they are issued.

Model(s) covered in this service manual:

MAV4057	MAV7200
MAV4500	MAV7000
MAV5000	MAV7057
MAV5057	MAV7600
MAV6000	MAV7700
MAV6057	MAV8000
MAV6200	MAV8057
MAV6257	MAV8500
MAV6300	MAV8600
	MAV9600

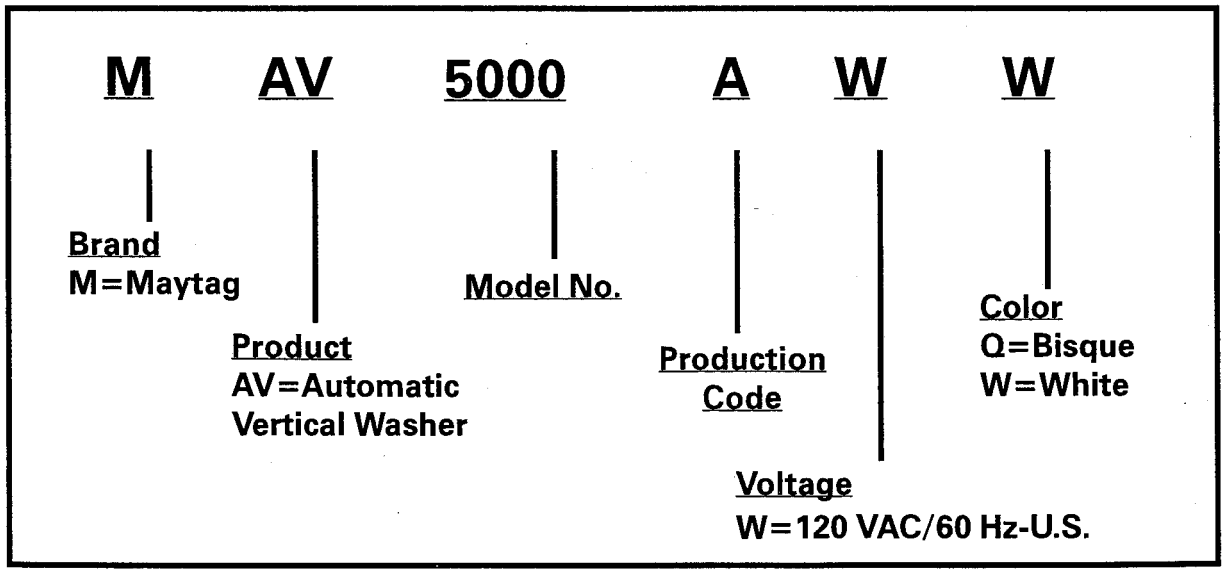

©2000 Maytag Appliances Sales Company

For additional information on material covered in this manual, including safety issues, contact:

Maytag Appliances Sales Company -
Customer Service
240 Edwards Street, S.E.
Cleveland, TN 37311

Phone: 423.472.3333
FAX: 423.478.6722

©2000 Maytag Appliances Sales Company

INTRODUCTION ..... i-ii
CONTENTS ..... iii-vi

SECTION 1. GENERAL INFORMATION 1-1
PRE-INSTALLATION REQUIREMENT 1-1
ELECTRICAL REQUIREMENTS 1-1
GROUNDING INSTRUCTIONS 1-2
UNCRATING INSTRUCTIONS 1-2
INSTALLATION PROCEDURE 1-3
FINAL INSTALLATION CHECK LIST 1-5
UNIQUE INSTALLATIONS 1-5
SPECIFICATIONS 1-7
CYCLE CHARTS 1-9
SPECIAL TOOLS 1-12

SECTION 2. OUTLINE OF MECHANICAL OPERATION 2-1
GENERAL INFORMATION 2-1
CLUTCH ASSEMBLY 2-1
DRIVE PULLEY AND CAMS 2-3

SECTION 3. EXPLODED VIEW OF COMPONENTS 3-1

SECTION 4. CABINET ASSEMBLY COMPONENTS 4-1
CONTROL PANEL ASSEMBLY 4-1
VERTICAL SWITCHES 4-2
TIMER REMOVAL 4-2
AUTOMATIC TEMPERATURE CONTROL BOARD 4-3
TOP COVER ASSEMBLY 4-3
STANDARD LID ASSEMBLY 4-4
30 DAY DETERGENT DISPENSER 4-5
DETERGENT DISPENSING 4-6
CLEANING THE DISPENSER 4-7
FRONT PANEL 4-7
REAR ACCESS PANEL 4-8
CABINET BODY ASSEMBLY 4-9
BASE ASSEMBLY 4-9
STABILIZER ASSEMBLY 4-11
TOP COVER TO CABINET HINGE 4-12

SECTION 5. WATER - RELATED COMPONENTS 5-1
WATER MIXING VALVE 5-1
WATER INLET FLUME 5-2
AIR BELL 5-2
HOSES 5-2

©2000 Maytag Appliances Sales Company

TUB TOP 5-3
AGITATOR 5-3
INNER TUB 5-4
OUTER TUB ASSEMBLY 5-4
PUMP ASSEMBLY 5-5
WATER VALVE INJECTION SYSTEM 5-7
STAINLESS STEEL SPINNER ASSEMLY 5-9

SECTION 6. SUSPENSION SYSTEM 6-1
SUSPENSION HOUSING 6-2
TUB BRACES 6-2
SUSPENSION SPRINGS 6-2

SECTION 7. TRANSMISSION AND RELATED 7-1
SEAL NUT ASSEMBLY 7-2
UPPER BEARING AND SEAL HOUSING 7-2
TUB SEAL 7-3
TUB SEAL REPLACEMENT 7-3
UPPER SPIN BEARING 7-4
DRIVE PULLEY AND CAMS 7-4
BRAKE AND SNUBBER ASSEMBLY 7-7
TRANSMISSION ASSEMBLY COMPLETE (Non-Repairable) 7-9
TRANSMISSION HOUSING ASSEMBLY 7-10
LOWER BEARING ASSEMBLY 7-10
DIAGNOSING TRANSMISSION PROBLEMS 7-12
TORQUE TESTING 7-12
TRANSMISSION REMOVAL 7-14

SECTION 8. ELECTRICAL COMPONENTS & TESTING 8-1
ELECTRICAL TEST EQUIPMENT 8-1
ELECTRICAL TEST 8-2
TIMER 8-2
TIMER SEQUENCE CHART 8-3
AUTOMATIC TEMPERATURE CONTROL BOARD 8-4
ANALOG TEMPERATURE CONTROL BOARD DIAGNOSTIC TABLE 8-6
MICROPROCESSOR TEMPERATURE CONTROL BOARD 8-6
MICROPROCESSOR TEMPERATURE CONTROL BOARD DIAGNOSTICS 8-7
TIMER LINE SWITCH INPUT 8-8
TEMPERATURE CONTROL BOARD TEST PROCEDURE (MAV8000 & MAV8057) 8-8
WATER VALVE 8-8
MOTOR 8-9
MOTOR SWITCH 8-9
MOTOR CIRCUIT TESTING 8-11
MOTOR MOUNTING 8-13
WATER LEVEL SWITCH 8-14
SELECTOR SWITCHES 8-16

©2000 Maytag Appliances Sales Company

OPTION SWITCH 8-16
WATER TEMPERATURE 8-17
LID SWITCH 8-17

SECTION 9. TROUBLESHOOTING 9-1
DIAGNOSTIC FLOW CHARTS 9-1

SECTION 10. ELECTRICAL SCHEMATICS 10-1
SCHEMATIC MAV4057, 4500 10-2
SCHEMATIC MAV5000 10-3
SCHEMATIC MAV5057 10-4
SCHEMATIC MAV6000 10-5
SCHEMATIC MAV6057 10-6
SCHEMATIC MAV7000 10-7
SCHEMATIC MAV7057 10-8
SCHEMATIC MAV8000 10-9
SCHEMATIC MAV8057 10-10
SCHEMATIC MAV8500 10-11
SCHEMATIC MAV6200 10-12
SCHEMATIC MAV6257 10-13
SCHEMATIC MAV6300 10-14
SCHEMATIC MAV7200, MAV7600 10-15
SCHEMATIC MAV770 10-16
SCHEMATIC MAV8600 10-17
SCHEMATIC MAV9600 10-18

©2000 Maytag Appliances Sales Company

NOTES

©2000 Maytag Appliances Sales Company

SECTION 1. GENERAL INFORMATION

WASHER PRE-INSTALLATION REQUIREMENTS

NOTE: ***Proper installation is the responsibility of the purchaser.***

Checkpoints for proper installation:

- Properly grounded electrical outlet is required. Use 15 amp fuse or comparable circuit breaker for electrical service.

- Standpipe Drain System must be able to accept 1½" O.D. drain hose. In cases where an air tight connection is required, an anti-siphoning valve, part number **12001586**, should be placed in the drain hose to prevent siphoning from the washer or facility during agitation. Standpipe height of 36" is recommended.

NOTE: ***If drain standpipe is in excess of 5 feet above floor level, install pump accessory kit, part number 12001587.***

- These units are not equipped with a siphon break, and the drain hose must be elevated to a minimum height of 36". For installations with short standpipes, the drain hose must be supported by clipping the drain hose into the clip on the back of the washer. Then a coupler and additional hose length is added to the existing drain hose.

- Hot and Cold water faucets should be within four (4) feet of the back of the washer. This allows for quick access for immediate shut off of the water.

- Water heater should be set to deliver a minimum of 120° (49°C) hot water to the washer.

- Do not store or operate washer in temperatures below freezing. This can cause damage to the pump, hoses and other components. ***(See page 1-5 for long term storage.)***

- Water pressure of 20 - 120 P.S.I. is required to fill the washer in the appropriate time frame. Pressures of less than 20 P.S.I. may cause an extended or exceptionally long fill time. Refer to the troubleshooting section for more information regarding a solution for slow fill situations.

- Best performance is obtained with the washer installed on a solid floor. Wood floor constructions may need to be reinforced to minimize vibration from unbalanced load situations. Carpets and soft tile surfaces are also contributing factors in vibration and/or movement during the spin cycle. **Never install washer on platform or weak support structure.**

ELECTRICAL REQUIREMENTS

1. Provide an individual 120 volt, 60 HZ, branch circuit with ground for the washer. This circuit must be rated for 15 amperes or more.

2. Protect the washer's electrical circuit with a 15 ampere time delay fuse or circuit breaker.

3. Install in accordance with National Electrical Code and all local codes and ordinances.

©1999 Maytag Appliances Sales Company

GROUNDING INSTRUCTIONS

The washer must be grounded. In the event of a malfunction or breakdown, grounding will reduce the risk of electrical shock by providing a path of least resistance for electrical current.

The washer is equipped with a power supply cord which has a grounding conductor and three-prong grounding plug. For proper grounding, the three-prong grounding plug must be plugged into an appropriate three-prong grounded receptacle or outlet (see the following figure). The receptacle must be properly installed and grounded in accordance with the National Electrical Code and all local codes and ordinances.

WARNING: ***Improper connection of the grounding conductor or the three-prong grounding plug of the power supply cord may result in an electrical shock hazard. If there is any doubt as to whether the washer is properly grounded, have the installation checked by a qualified electrician.***

DO NOT MODIFY THE PLUG PROVIDED WITH THE WASHER - ***If the plug will not fit the outlet***, have a proper outlet installed by a qualified technician.

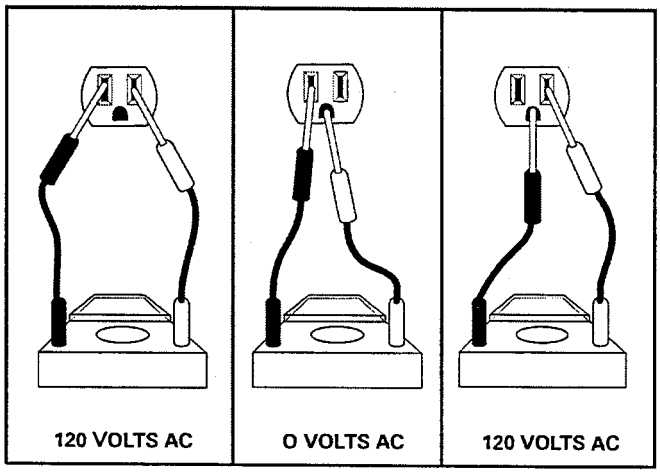

Figure 1-1 SL261TIF

WARNING: For your safety and to protect the test equipment, be sure that the wall outlet is properly polarized and grounded.

UNCRATING INSTRUCTIONS

NOTE: ***The following steps must be performed in the correct order to ease uncrating.***

1. Remove the carton by cutting only marked areas of the carton. **CAUTION:** ***Hoses are connected to the washer.***

2. Lift the carton and top cap assembly up and clear of the washer. Carefully remove any packaging materials from the outside of the washer.

NOTE: ***Retain the corner posts for later use.***

3. Remove tape and raise the washer lid; remove the items shipped in the spin basket. Save the literature for future reference. Close lid and tape.

4. Position three (3) corner posts on the floor near the rear base of the washer. Place the remaining corner post on the floor approximately two feet away. Carefully lay the washer on its back, on top of the corner posts.

©1999 Maytag Appliances Sales Company

DO NOT LOWER OR RAISE THE WASHER BY THE CONTROL PANEL.

5. Remove the crate bottom from the washer. Pop the plastic loose from the screw located between the back feet, or remove the screw entirely with a screwdriver ***(Figure 1-2).*** Pull the plastic base away from the back feet. Grasping the plastic base on the sides, pull down and toward you to release the front feet from the slots and remove the base. Discard the base (it can be recycled). **RETURN THE WASHER TO THE UPRIGHT POSITION.**

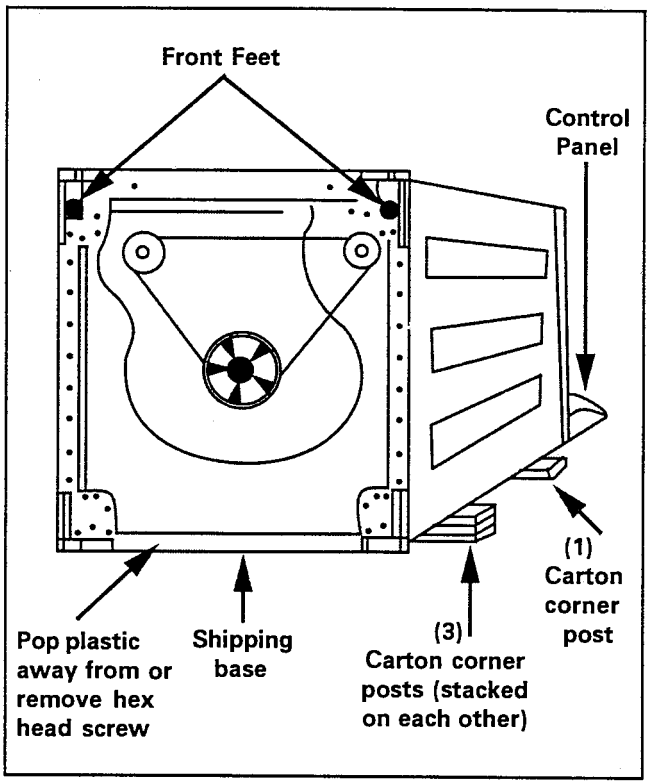

Figure 1-2

INSTALLATION PROCEDURE

NOTE: ***Proper installation is the responsibility of the purchaser.***

Service calls performed as a result of improper setup, adjustment and connection are the responsibility of the installer.

Proceed as follows:

1. Place the washer as close to its final operating location as possible.
2. Make sure rear feet move up and down freely.
3. Place washer in final location.

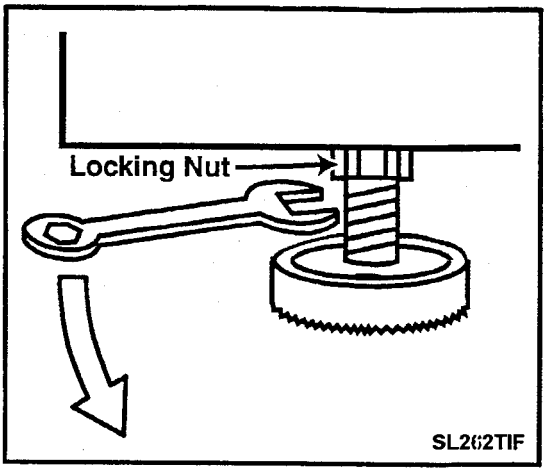

Figure 1-3

4. When the machine is in place, screw front feet out of base against the floor until the machine is level across the top front of the washer.
5. While holding foot still, turn the adjusting locknut clockwise until the nut is tightened firmly against base ***(Figure 1-3).***
6. Tilt machine forward until rear of cabinet is approximately 4 inches off the floor. Lower the machine back to the floor on the rear feet. This operation causes the rear stabilizing feet to conform to the contour of the floor and seat them solidly. Push washer with hands on opposite corners to check stability ***(Figure 1-4).***

©1999 Maytag Appliances Sales Company

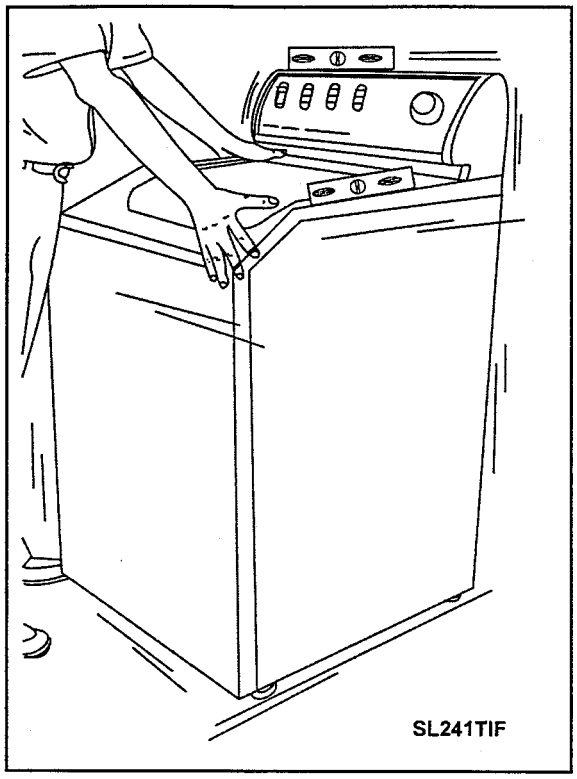

Figure 1-4

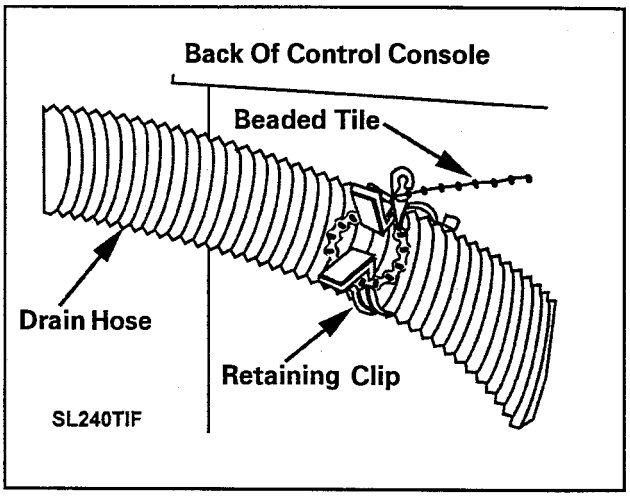

Figure 1-5

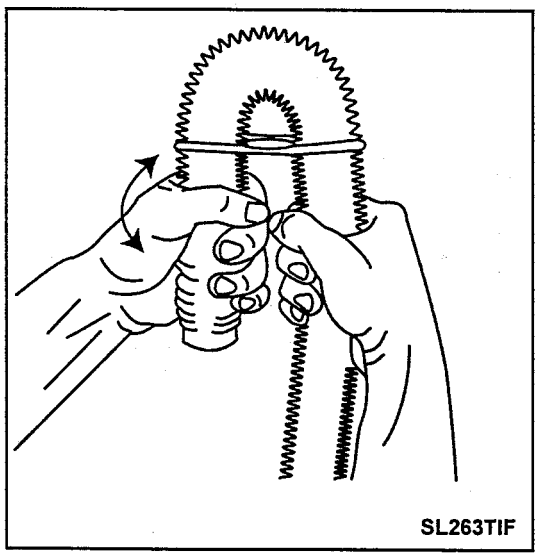

Figure 1-6

7. If the standpipe is less than 36" high, pull the drain hose up vertically and snap the hose into the retaining clip positioned on the upper, rear cabinet wall ***(Figure 1-5).***

8. Install gooseneck end of drain hose into drain standpipe. Be sure the connection is not airtight between the drain hose and the standpipe. Standpipe must be at least 36" high. If the hose is twisted after it has been placed into the standpipe, adjust the end of the hose to remove the twist. To remove the twist, turn the short end of the hose while holding the base of the hose stationary ***(Figure 1-6).***

9. The drain hose should fit loosely in the standpipe to prevent siphoning. (An anti-siphon valve and associated parts are available from your dealer, part number **12001586**.)

NOTE: ***Be sure the drain hose is not twisted or kinked.***

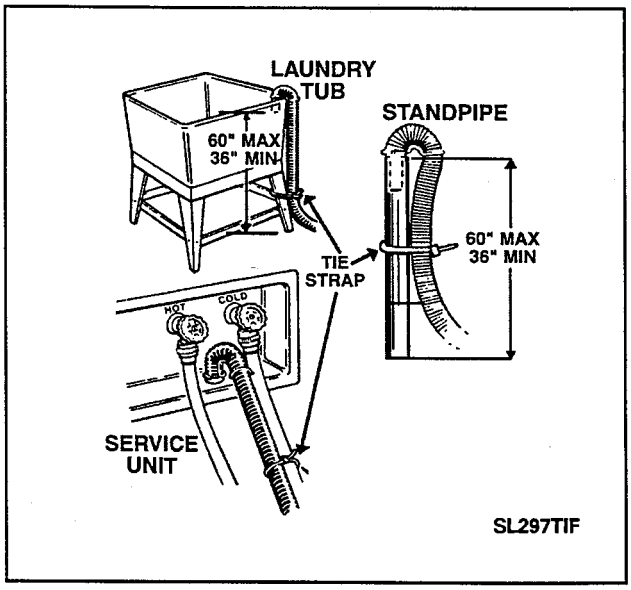

Figure 1-7

©1999 Maytag Appliances Sales Company

10. Secure the drain hose to the standpipe or drain facility with the cable strap provided. This will ensure the drain hose will not fall out of the drain facility ***(Figure 1-7).***

11. Connect inlet hoses to water supply using screen washers at faucet connections, with the domed plastic screen facing the faucet ***(Figure 1-8).*** Tighten hose connections by hand until snug. Then, turn another 2/3 of a turn with the pliers.

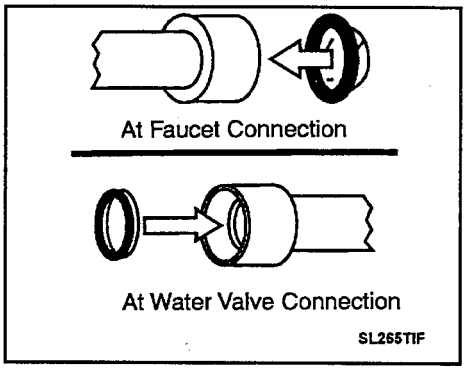

Figure 1-8

12. With hoses attached to both the faucets and the water valve, turn on the water and check for leaks. ***Note the H and C designations on the water valve bracket for the Hot and Cold hoses.***

13. Plug the power cord into an outlet.

14. Start the washer in a spin cycle per operating instructions to center basket.

15. Start the washer in a wash cycle per operating instructions. Allow water to fill in machine until it reaches the level of the bottom row of holes in the wash basket. Then, stop the washer by pushing on timer knob.

16. If the water is not level with the bottom row of holes all around the basket ***(Figure*** 1-9), readjust the leveling feet as required to level. Remove the water by selecting a spin cycle.

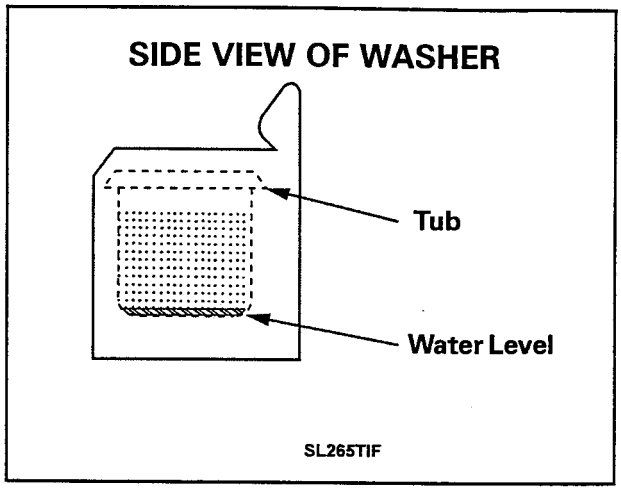

Figure 1-9

FINAL INSTALLATION CHECK LIST

1. Have all installation requirements been observed?

2. Have locknuts on front feet been tightened?

3. Are there any kinks in the hoses?

4. Are any water leaks evident?

UNIQUE INSTALLATIONS

Painted/Sloped Basement Floors - Apply non-slip discs, part number **211692**, to the floor directly under the rubber feet of the washer.

Carpeted Floors - Apply carpet installation discs, part number **204986**.

Weak Floors - Install rear legs with plastic grommets, part number **12001577**, to be inserted into base frame to substitute for the self adjusting legs.

Cold Storage or Installations - Installation in any location subject to freezing temperatures is not recommended. If the washer must be installed in such a location, it should be thoroughly drained after each use as follows:

©1999 Maytag Appliances Sales Company

- Turn off hot and cold water faucets.
- Disconnect both water inlet hoses at the faucets. Lower them to the floor.
- With the service cord connected to the electrical outlet, rotate the timer to the normal start or fill position and pull timer knob to start washer. Turn water temperature selector switch to warm.
- When water stops draining from the hoses, disconnect service cord.
- Lower the drain hose to the floor and allow it to drain into a floor drain or shallow pan.

In below-freezing temperatures, ice may form in the "fill" flume and the pump. Raise the room temperature and allow time for the ice to melt before using the washer.

©1999 Maytag Appliances Sales Company

SPECIFICATIONS - WASHER

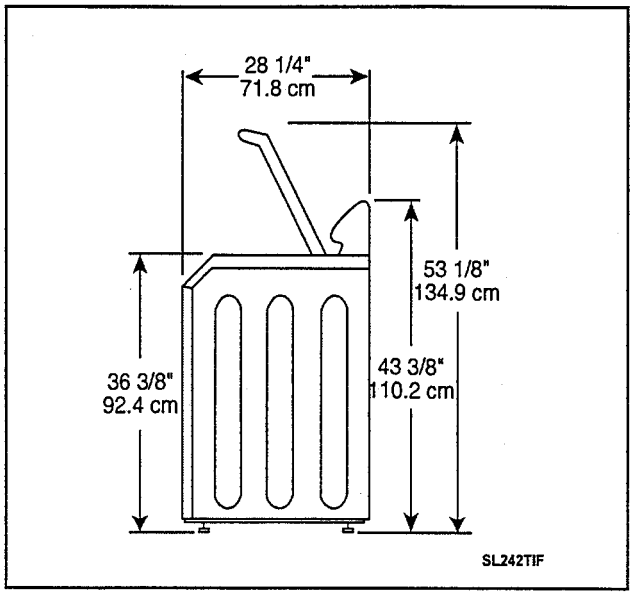

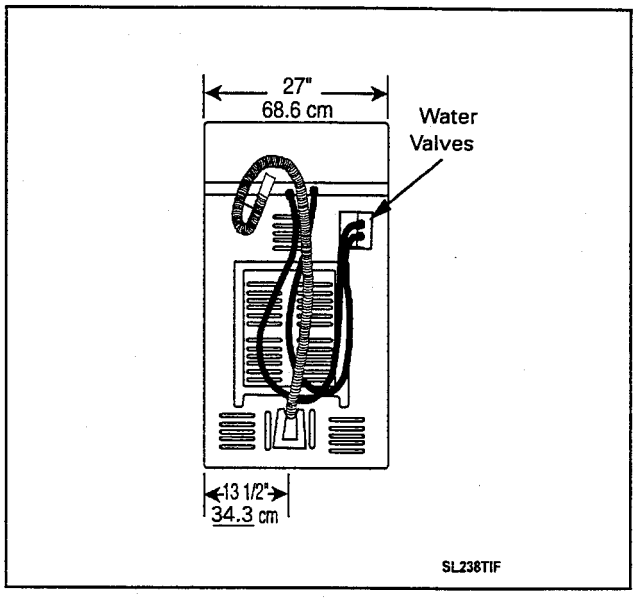

CAPACITY	3.2 Cubic Feet
ELECTRICAL	120 Volts, 60 Hz; Requires 15 amp circuit breaker or fused electrical supply. Power cord must be connected to a properly grounded and polarized outlet.
MOTOR	1/2 H.P., reversible, 2 Speed, 115 volt, 60 cycle A.C.
POWER USAGE	**Motor Input:** During Agitation* - 480 Watts Max. (Fast) 370 Watts Max. (Slow) During Pump Out* - 760 Watts (Fast) 510 Watts Max. (Slow) Spin - 460 Watts (Fast) 340 Watts (Slow) [*Wattage readings taken with no clothes in spinner.]
TRANSMISSION	Rack and pinion type, incorporating reduction gears
WATER USAGE	Water pressure should be 20 - 120 P.S.I. (1.06-8.44 kg/cm) at inlet hose connection. (SEE PAGE 1-8 FOR MORE DETAILS)
HOSE LENGTHS	Four foot inlet hoses with inlet washers attached to water valve. Drain hose attached to pump and will accommodate 36" high drain stand pipe.
DIMENSIONS	Cabinet Dimensions: 27" (68.58cm)W x 27 (68.58cm)D x 43 3/8" (110.2cm)H
WEIGHT (Approx.)	Uncartoned 160 lb. (72.6 kg.) Approx. Crated 185 lb. (84 kg.) Approx.
FINISH	Top Cover - Porcelain Lid - Porcelain Outer Tub - constructed entirely of polypropylene Spin Basket - polypropylene Cabinet - baked enamel Base and other finished parts - baked primer

©1999 Maytag Appliances Sales Company

Setting	Gallons	*Depth Inches	*Basket Perforations
Mini	10.5	6"	3 1/2"
Medium	14.1	8 1/2"	5"
High	19.5	11"	7"
Super	23.3	13 1/2"	9 1/4"

*Allowable variations are plus or minus 1/2 inch.

AGITATOR SPEED

Regular Cycle	88 Oscillations per minute	155 Degree Arc
Slow (Delicate) Cycle	57 Oscillations per minute	155 Degree Arc

SPIN SPEED

Regular Cycle	620 R.P.M.
Slow (Fine Wash) Cycle	410 R.P.M.

TABLE 1-1. AMPERAGE CHART

CYCLE	WATER LEVEL	*AMPS
Agitate-Regular	Full Tub	10.4
Agitate-Slow	Full Tub	7.6
Agitate-Regular	Dry Tub	7.5
Spin-Regular	Dry Tub	10.2
Spin-Slow	Dry Tub	7.6
Pump Out-Regular	Full Tub	10.8
Pump Out-Slow	Full Tub	8.0

TABLE 1-2. RESISTANCE CHART

COMPONENTS	*RESISTANCE (OHMS)
Timer Motor	2360
Mixing Valve	500-1000
Cold Solenoid	853
Hot Solenoid	867
Drive Motor	
High Speed	1.3
Low Speed	2.3
Start	3.1

*** These values can vary slightly.**

TABLE 1-3. WATTAGE CHART

CYCLE	*WATTAGE RANGE
Agitate-Regular Full Tub	610-640 / 670 (MAX.)
Agitate-Slow Full Tub	370-400 / 420 (MAX.)
Agitate-Regular Dry Tub	460-470 / 480 (MAX.)
Agitate-Slow Dry Tub	350-360 / 370 (MAX.)
Pump Out-Regular	760
Pump Out-Slow	510
Spin-Regular Full Tub	460
Spin-Slow Full Tub	340

*** These will vary with washer load and line voltage.**

©1999 Maytag Appliances Sales Company

CYCLE CHARTS

COLORS

Function	Speed	Heavy Option Selected (Min.)	Normal Option Selected (Min.)	Light Option Selected (Min.)
Agitate	Fast	9	3	0
Agitate	Slow	9	9	9
Spin	Fast	6	6	6
Agitate	Slow	6	6	6
Spin w/Spray	Fast	9	9	9

SUPERWASH COLORS

Function	Speed	Heavy Option Selected (Min.)	Normal Option Selected (Min.)	Light Option Selected (Min.)
Agitate	Fast	18	12	9
Agitate	Slow	0	0	0
Spin	Fast	6	6	6
Agitate	Slow	6	6	6
Spin w/Spray	Fast	9	9	9

WHITES

Function	Speed	Heavy Option Selected (Min.)	Normal Option Selected (Min.)	Light Option Selected (Min.)
Agitate	Fast	12	6	0
Agitate	Slow	9	9	9
Spin w/Spray	Fast	6	6	6
Agitate	Fast	6	6	6
Spin	Fast	9	9	9

©1999 Maytag Appliances Sales Company

SUPERWASH WHITES

Function	Speed	Heavy Option Selected (Min.)	Normal Option Selected (Min.)	Light Option Selected (Min.)
Agitate	Fast	21	15	9
Agitate	Slow	0	0	0
Spin w/Spray	Fast	6	6	6
Agitate	Fast	6	6	6
Spin	Fast	9	9	9

DELICATES

Function	Speed	Heavy Option Selected (Min.)	Normal Option Selected (Min.)	Light Option Selected (Min.)
Agitate	Slow	0	3	0
Soak	Not Applicable	0	3	0
Agitate	Slow	0	3	3
Soak	Not Applicable	0	3	3
Agitate	Slow	0	3	3
Spin w/Spray	Slow	0	6	6
Agitate	Slow	0	3	3
Spin	Slow	0	6	6

©1999 Maytag Appliances Sales Company

SUPERWASH DELICATES

Function	Speed	Heavy Option Selected (Min.)	Normal Option Selected (Min.)	Light Option Selected (Min.)
Agitate	Fast	0	3	0
Soak	Not Applicable	0	3	0
Agitate	Slow	0	3	3
Soak	Not Applicable	0	3	3
Agitate	Slow	0	3	3
Spin w/Spray	Slow	0	6	6
Agitate	Slow	0	3	3
Spin	Slow	0	6	6

©1999 Maytag Appliances Sales Company

SPECIAL TOOLS

All special tools are manufactured by Robinaire with the exception of the **35-2442** Brake Removal Tool and **35-2968** Spanner Wrench - Basket Hub. These tools are privately manufactured for and stocked by Customer Service.

NOTE: ***The tools listed below can be ordered from any authorized Customer Service parts distributor.***

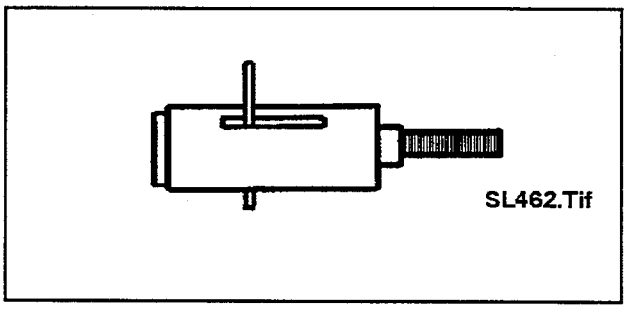

Brake Removal Tool, Part Number LA-2004

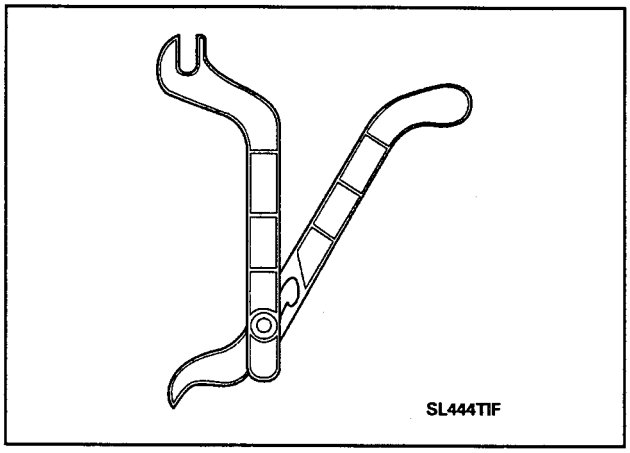

Spring Tool, Part Number 22002922

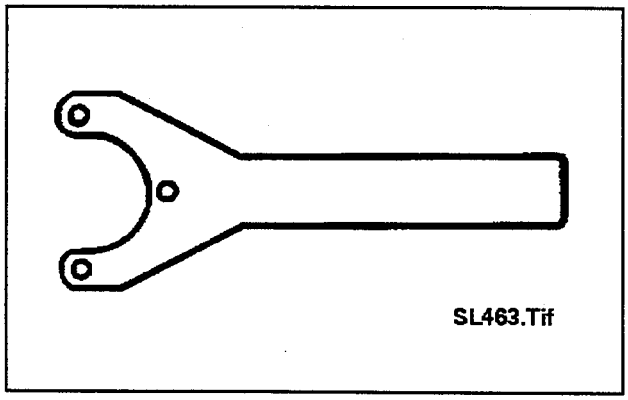

Spanner Wrench-Basket Hub, Part Number 35-2968

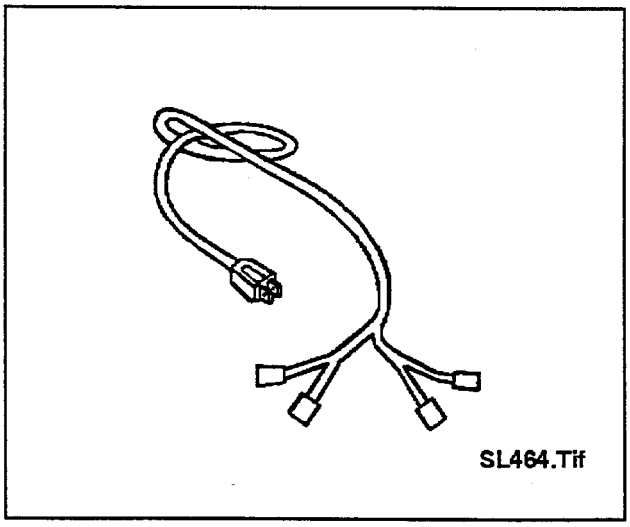

Motor Test Cord, Part Number 038183

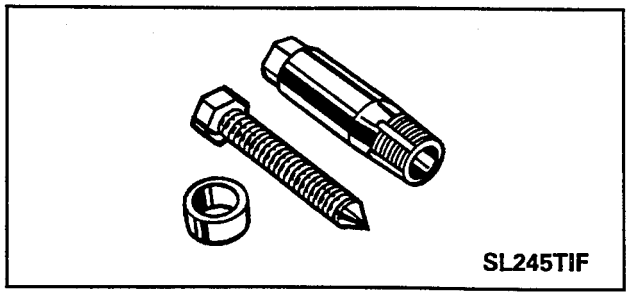

Seal Removal Tool, Part Number 2000021

©1999 Maytag Appliances Sales Company

SECTION 2. OUTLINE OF MECHANICAL OPERATION

GENERAL INFORMATION

NOTE: The rotation directions, stated in this outline, view the component from its pulley end.

The washer utilizes a reversible type motor which turns ***clockwise*** during the ***agitate cycle*** and ***counterclockwise*** during the ***spin cycle***.

A single belt is used to transmit power from the motor pulley to the drive and pump pulleys.

The transmission drive pulley, which drives the transmission drive shaft and hub assembly, and the pump pulley which drives the pump impeller, are in operation whenever the motor is running.

The transmission assembly converts the power from the motor to either drive the agitator or spin the basket. The direction the clutch assembly rotates determines which action takes place.

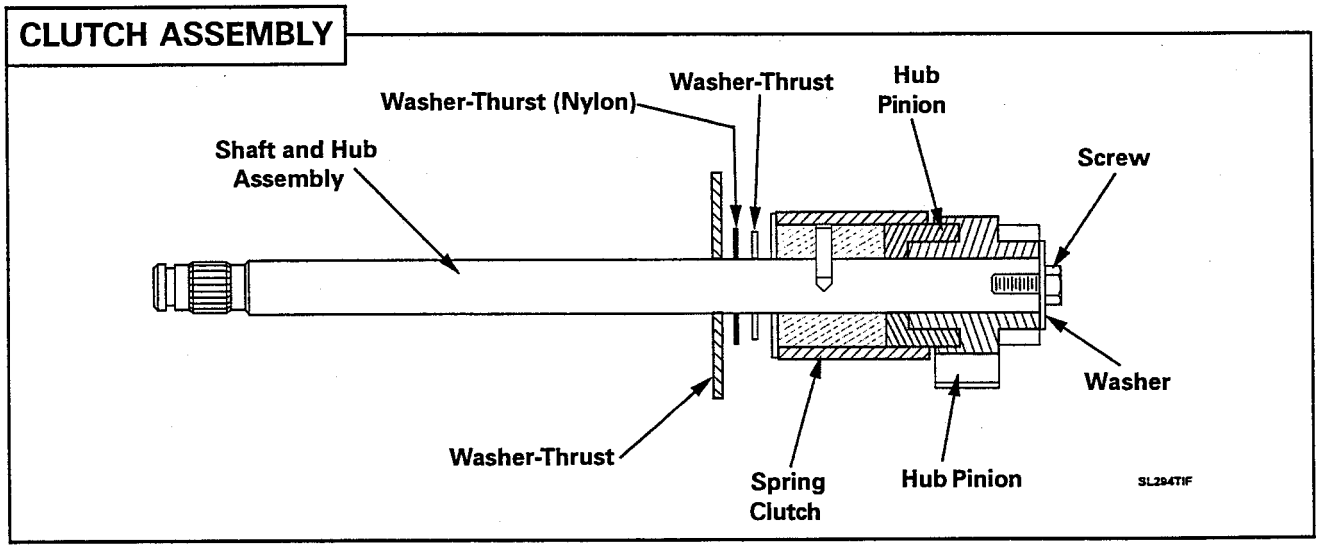

Figure 2-1

CLUTCH ASSEMBLY

The clutch assembly ***(Figure 2-1)*** consists of the drive shaft and hub assembly, clutch spring, and input pinion with gear lock assembly. The gear lock mechanism is part of the input pinion. The drive shaft serves only as a bearing surface for the drive pinion to revolve on. No direct drive is imparted from the shaft directly to the pinion. The inside diameter of the clutch spring is designed so that when the drive shaft is driven in a clockwise direction, the clutch spring tightens on the two hubs and becomes a positive link between them. When the drive shaft hub runs counterclockwise, the clutch spring relaxes in an override situation. While in override, or relaxed position, the clutch spring still maintains a drive link between the two hubs. The override tension, or torque, is used to drive the spin basket. The gear lock mechanism consists of two "wings" that project out from the input pinion.

©1999 Maytag Appliances Sales Company

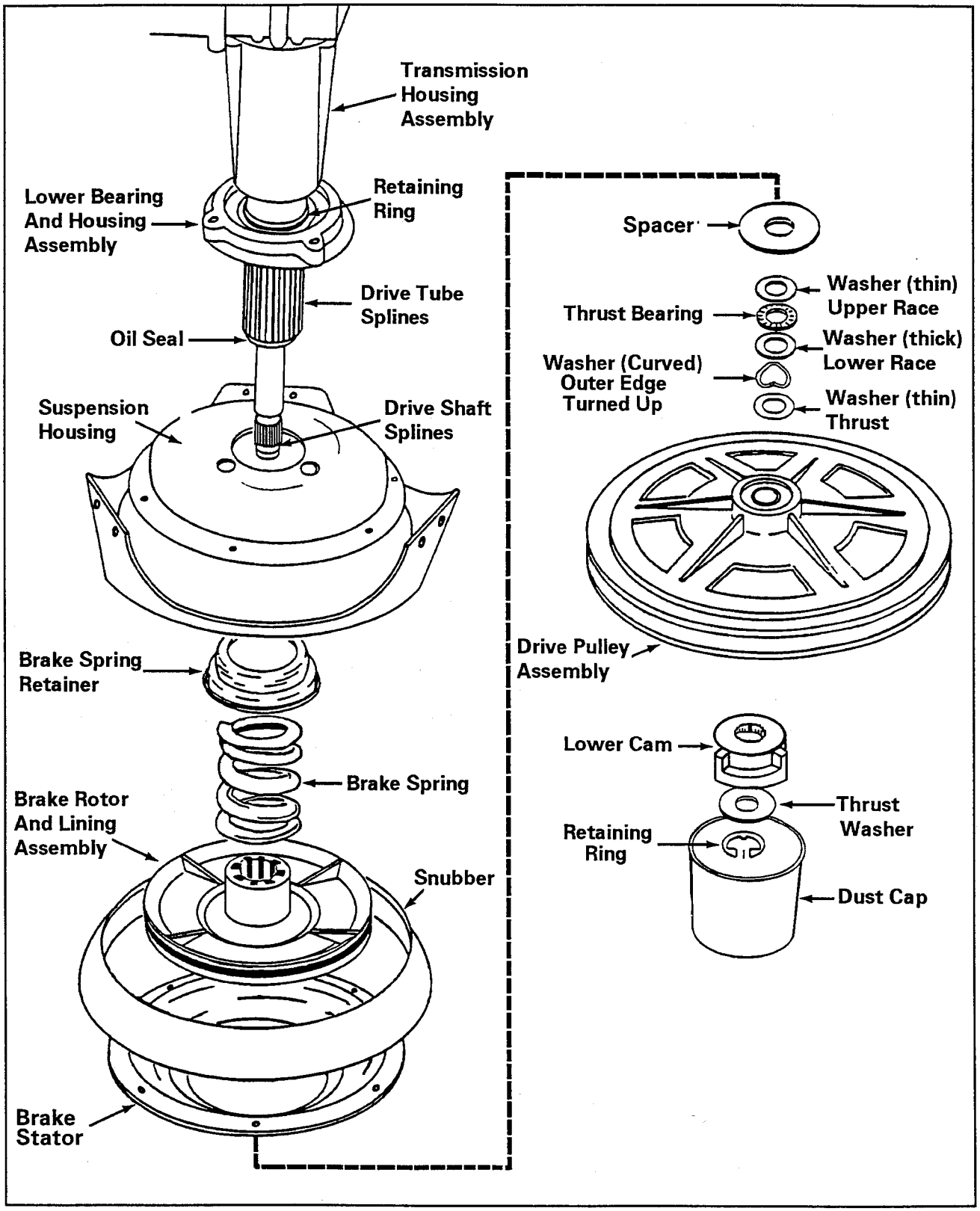

Figure 2-2

©1999 Maytag Appliances Sales Company

When the drive pinion rotates in a clockwise direction, the gear lock mechanism exerts no force on the input pinion. When the input pinion starts to revolve counterclockwise the "wings" drop into dents in the lower housing preventing the pinion from turning.

DRIVE PULLEY AND CAMS

The drive pulley and cam is located below the brake assembly on the drive shaft ***(Figure 2-2).***

All models are equipped with a plastic drive pulley which has the upper cam molded onto the bottom of the hub. The purpose of the pulley and cam arrangement is to drive the clutch assembly during the agitate and spin cycle, and to disengage the brake assembly during the spin cycle.

The drive pulley slips over the drive shaft and rests against a series of washers, a thrust bearing, and a large washer type spacer. The spacer locates against the bottom of the brake rotor and lining assembly ***(See the illustration on page 7-6).***

The lower cam slips over the end of the drive shaft where splines formed in the cam engage with mating splines on the drive shaft end. This imparts a direct drive from the cam to the drive shaft.

A shoulder molded on the bottom of the pulley hub engages "dogs" formed on the sides of the lower cam, and will drive it and the drive shaft in either direction.

A washer and retaining ring secure the pulley and cam on the drive shaft. A plastic dust cap snaps to the underside of the pulley to keep the cam surfaces clean.

OPERATION: AGITATION

When the drive pulley rotates ***CLOCKWISE,*** the upper and lower cams are designed to nest together which allows the drive pulley to remain in position on the drive shaft. The brake remains engaged and the drive pulley will turn the lower cam and drive the shaft to cause the transmission ***to agitate***.

The agitation is due to the clockwise (agitate) rotation of the drive shaft and the hub assembly as it is transmitted to the input pinion by the clutch spring. The input pinion meshes with the dual cluster gears which, in turn mesh with the dual crank gears ***(Figure 2-3).*** The circular motion of the dual crank gears are converted to the oscillating action of the agitator shaft by the dual rack gears. The rack gears have a stud that drops into the crank gears. These rack gears are contained by a rack carrier. Any tendency of the transmission to turn, or "creep," is prevented by the engaged brake assembly located on the under side of the suspension housing.

OPERATION: SPIN

When the drive pulley rotates ***COUNTER-CLOCKWISE,*** the upper cam and pulley ride up the lower cam approximately 3/16 of an inch before the driving shoulders on the pulley hub engage the "dogs" on the lower cam. This causes the top of the pulley hub to push against the spacer which compresses the brake spring and lifts the brake rotor and lining assembly off the brake stator. The brake is disengaged and the pulley will turn the lower cam and drive shaft to cause the transmission **to spin**.

A nylon cam, along with a special drive pulley, provides a cam action which raises the drive pulley during the counterclockwise (spin) rotation of the motor ***(Figure 2-2).*** As the drive pulley hub moves up, it compresses a brake spring and lifts the brake rotor and lining assembly, disengaging it from the stator. The transmission is now free to spin.

©1999 Maytag Appliances Sales Company

The counterclockwise rotation of the drive shaft and hub assembly causes the clutch spring to relax into an override position. The clutch spring still exerts a driving force to the input pinion even when it is in the override position. As this driving force of torque starts to turn the input pinion in a counterclockwise direction, it causes the "wings" of the gear lock mechanism to drop into dents on the lower housing. This prevents the input pinion from revolving in the counterclockwise direction. Therefore, the torque being delivered by the clutch spring is exerted against the transmission housing, causing the entire assembly to rotate. The washer basket is mounted to the basket drive hub which is secured to the transmission cover assembly, and revolves as part of the transmission. In this direction, the pump assembly will drain the water out of the unit.

©1999 Maytag Appliances Sales Company

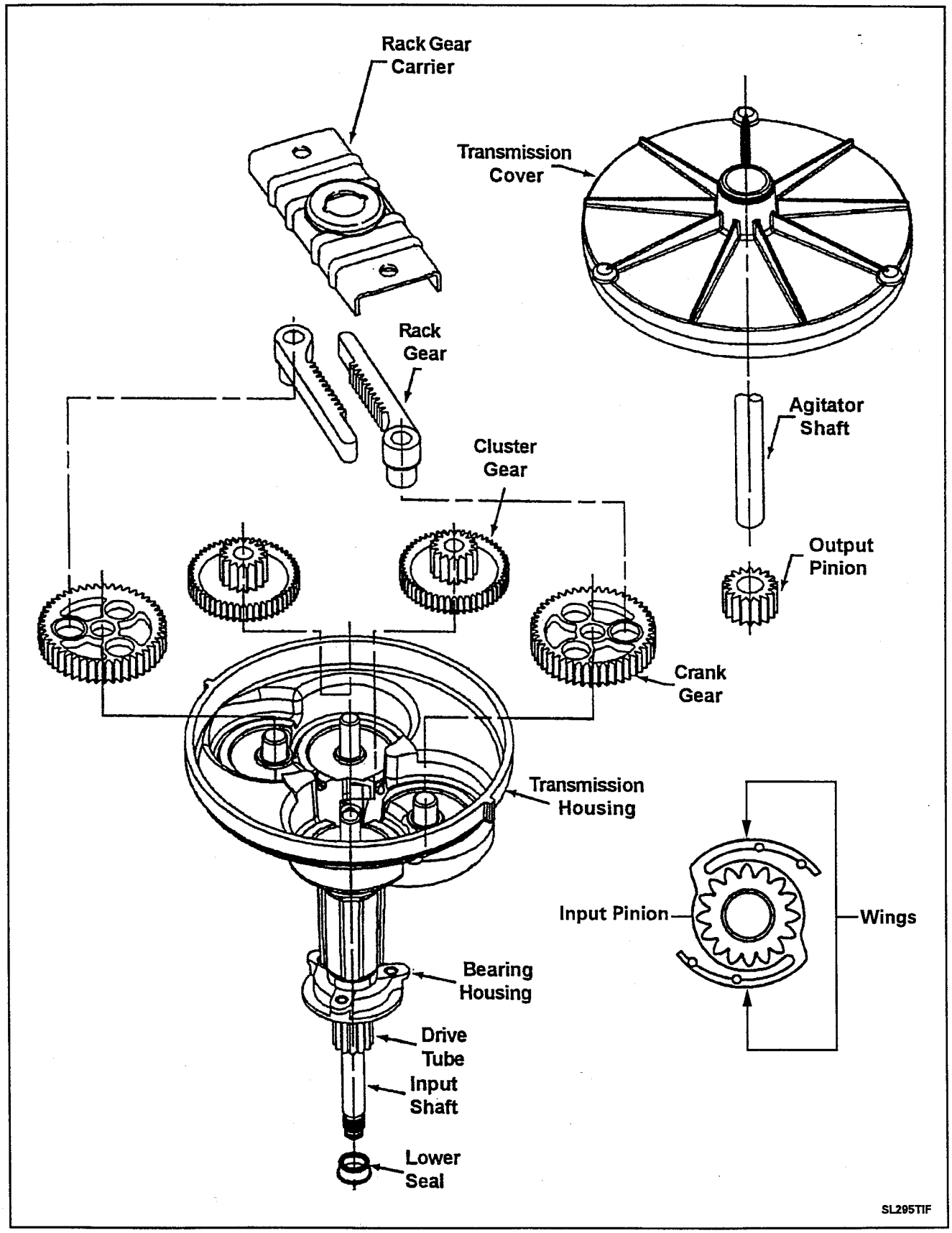

Figure 2-3

©1999 Maytag Appliances Sales Company

©1999 Maytag Appliances Sales Company

SECTION 3. EXPLODED VIEW OF COMPONENTS

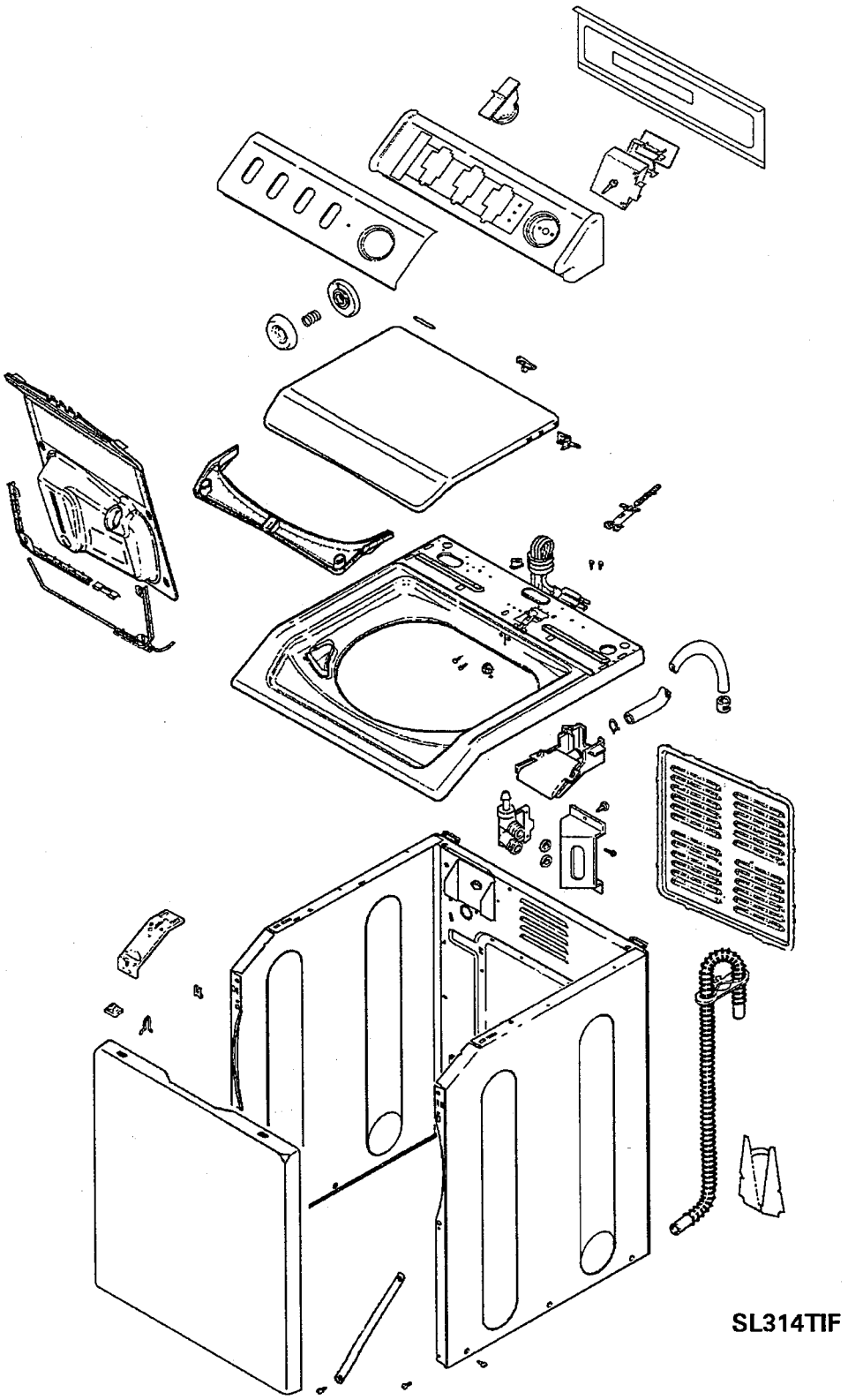

©1999 Maytag Appliances Sales Company

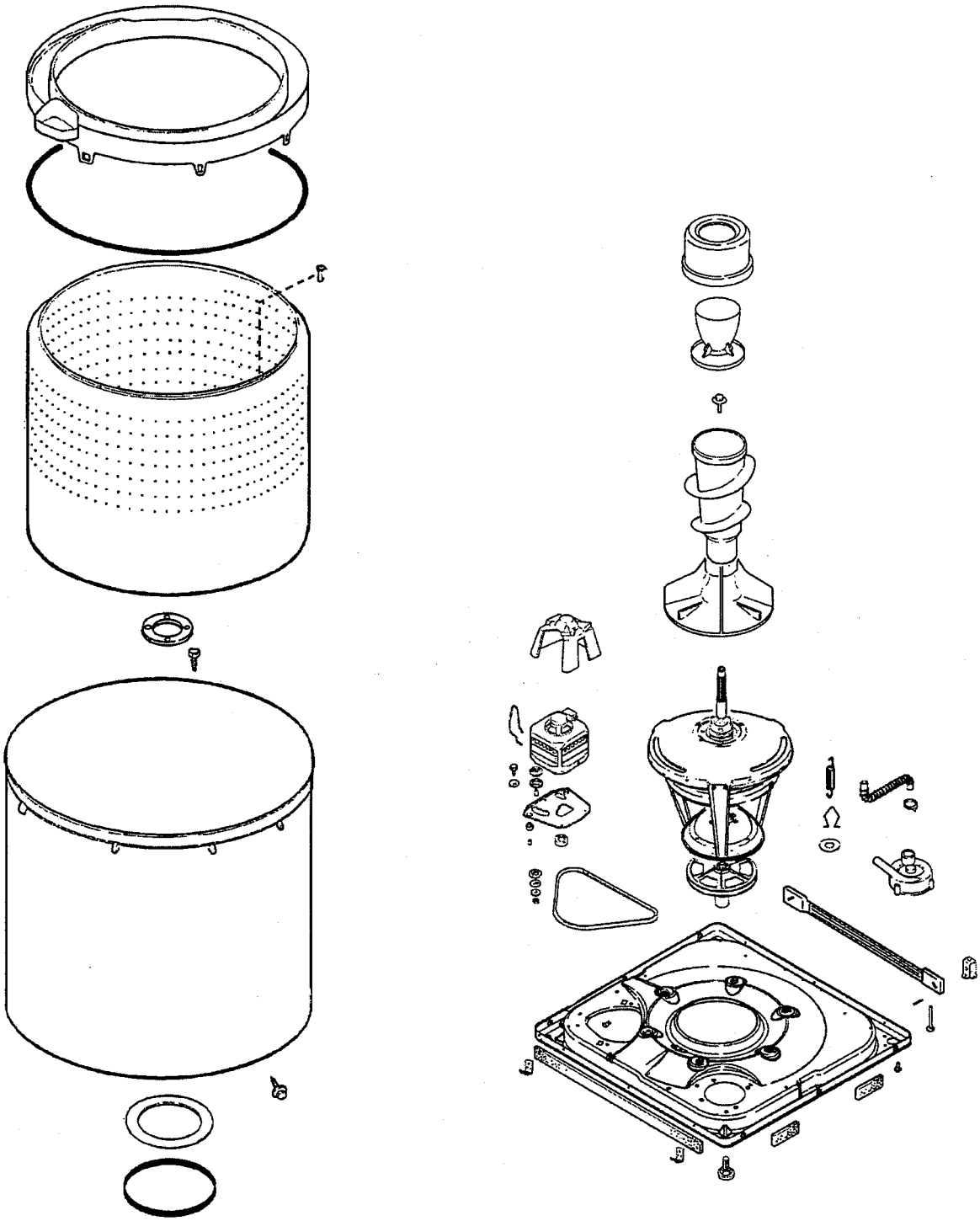

SL315TIF

©1999 Maytag Appliances Sales Company

SECTION 4. CABINET ASSEMBLY COMPONENTS

Warning **- Always shut off electrical power to the washer before beginning any service repair procedures.**

CONTROL PANEL ASSEMBLY

REMOVAL

1. **Disconnect power to the unit.**

2. Remove the three screws securing the console rear cover plate across the rear top edge of the console ***(Figure 4-1)***.

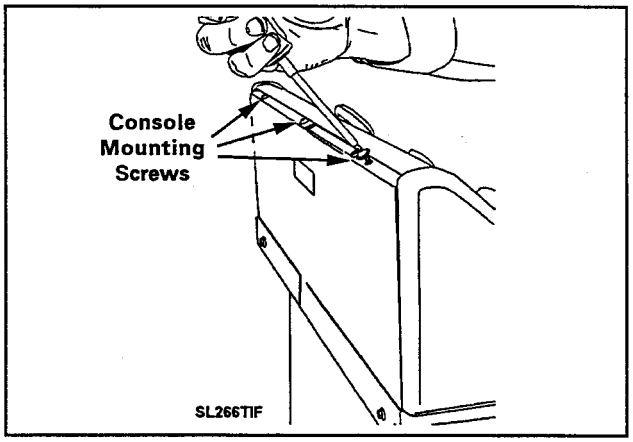

Figure 4-1

3. Lay a drop cloth across the top cover of the washer.

4. Grasp the top of the console and gently rock the top forward ***(Figure 4-2)***.

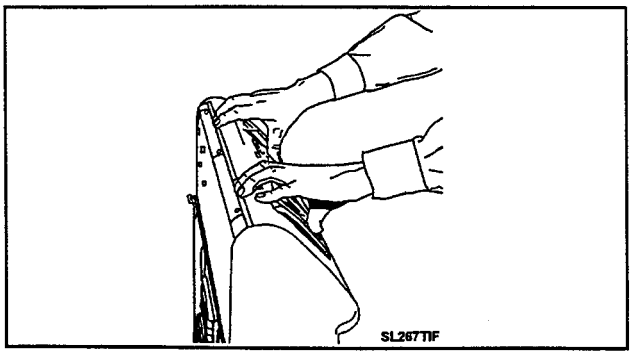

Figure 4-2

5. Push the bottom of the console toward the back panel to disengage the six locking feet from the top cover ***(Figure 4-3)***.

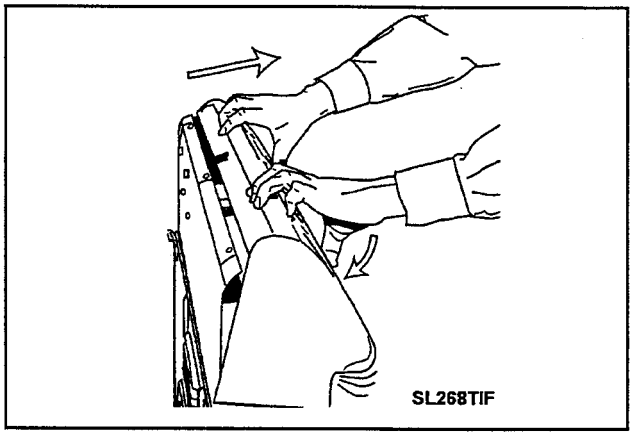

Figure 4-3

6. Carefully lift and roll the console forward onto the top cover. You now have access to the console components and wiring ***(Figure 4-4)***.

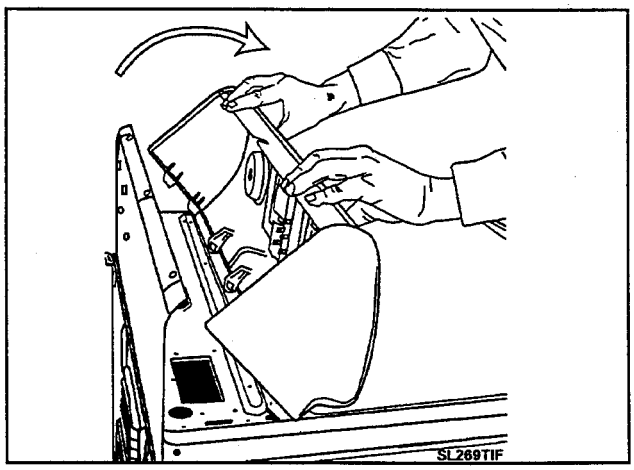

Figure 4-4

7. **To Reinstall:** Roll the console back into an upright position, engaging the locking feet into the slots in the top cover. Replace the three screws to attach console back to rear panel.

©1999 Maytag Appliances Sales Company

VERTICAL SWITCHES (Push Button)

REMOVAL

1. Depress the tab at the top of the switch with a screwdriver to disengage the tab from the console. Pivot the switch away from the console to remove ***(Figure 4-5)***.

REPLACEMENT

1. Align the rib on the bottom of the switch with the slot in the console. Pivot the switch up into the console until the tab engages the console securely. Check that the locating tabs on either side of the switch's lower alignment rib are in position to properly center and lock the switch into the lower part of the switch opening.

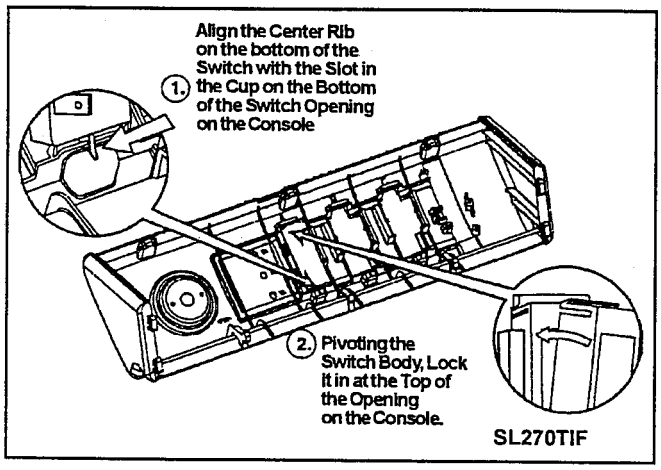

Figure 4-5

TIMER REMOVAL - All MAV Models Except MAV8500

1. **Disconnect power to the unit.**

2. Carefully lift the timer knob cap from the timer knob and pry the clip retainer from the timer shaft. Lift the dial and knob off the timer shaft by pulling away from the face of the control console ***(Figure 4-6).***

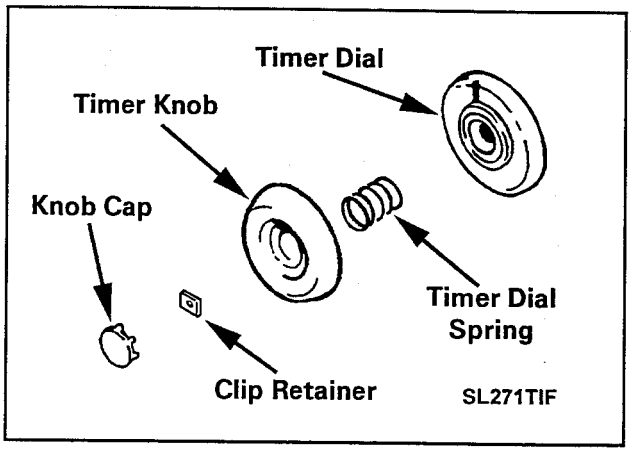

Figure 4-6

3. Disengage the console assembly from the top cover and roll forward ***(See Console Removal)***.

4. Remove timer mounting screws under the timer knob.

5. Lift the timer away from the console.

REPLACEMENT

1. Reverse steps 1 through 5.

TIMER REMOVAL - MAV8500 Models

1. **Disconnect power to the unit.**

2. Remove the knob cap.

3. Gently pry the locking pin up and lift the timer knob off the dial skirt.

4. Lift the dial skirt off the timer shaft ***(Figure 4-7).***

©1999 Maytag Appliances Sales Company

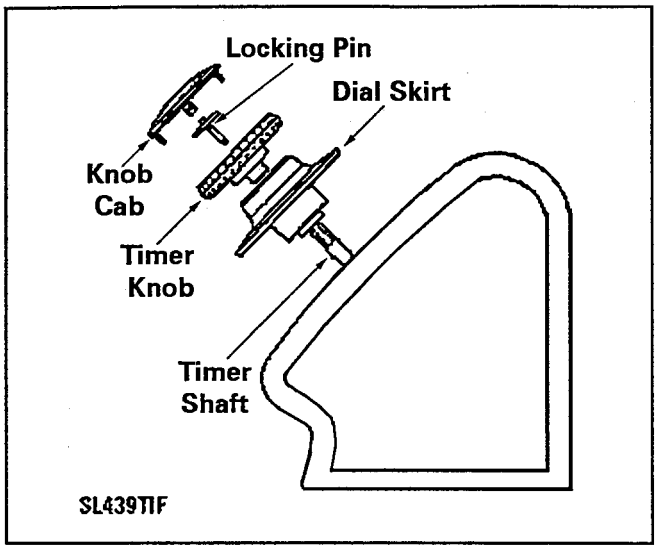

Figure 4-7

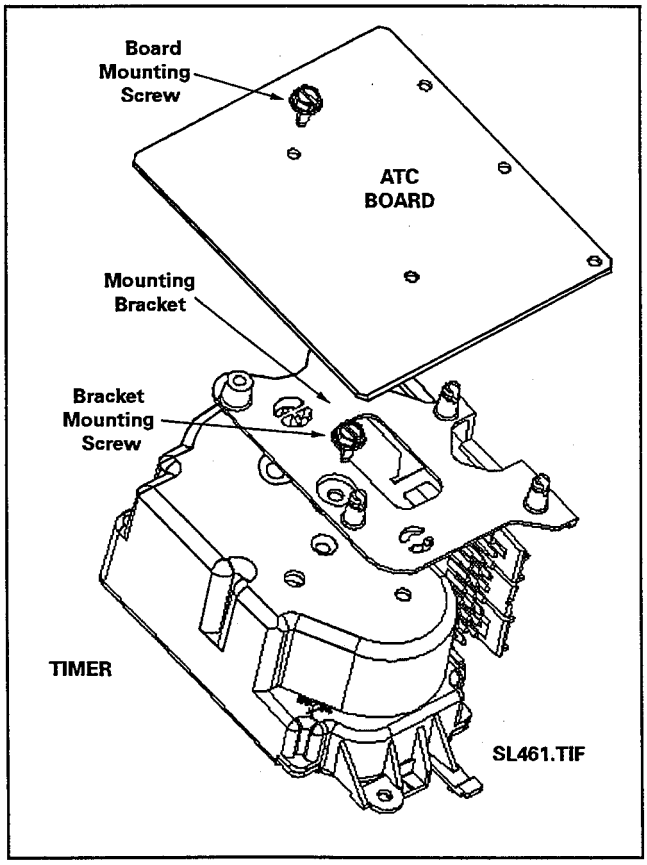

Figure 4-8

AUTOMATIC TEMPERATURE CONTROL BOARD

REMOVAL

1. Disengage the console assembly from the top cover and roll forward ***(See Console Removal).***

2. Remove wire harness from control board.

3. Squeeze the locking tabs together ***(Figure 4-9).***

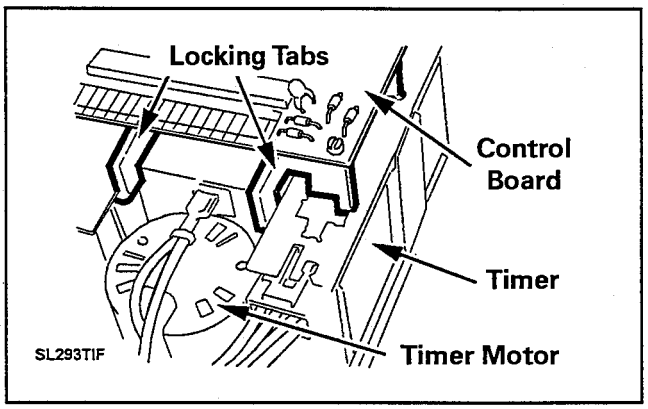

Figure 4-9

4. Slide the control board and bracket away from the timer motor to unhook the bracket from the timer rear face plate. Mounting hooks on the bracket engage with the edge of the timer rear face plate.

FOR ALL MAV8500 MODELS

1. Remove board mounting screw, and bracket mounting screw.

2. See ***Figure 4-8*** for additional assistance.

©1999 Maytag Appliances Sales Company

TOP COVER ASSEMBLY

The top cover assembly consists of the top cover, washer lid assembly, lid switch and bracket, water inlet flume, bleach dispenser, and the control panel assembly.

The assembly is mounted to the cabinet with two (2) steel hinges which are attached to the upper cabinet. These hinges engage into hinge slots located in the back edge of the cabinet which allows the top cover to be raised for servicing.

Two (2) slots pierced into the front flange of the top assembly align with two (2) locating plastic shipping stops to center the top cover to the cabinet. Two (2) spring clips engage the top cover flange and secure the top assembly to the cabinet front.

NOTE: ***The locating pins and top clips are mounted to the front panel flange on all the models (Figure 4-10).***

Raising the top will allow access to:

- Flume and Inlet Hose
- Lid Switch Actuator
- Air Dome Hose Connection
- Water Inlet Valve Wiring
- Spin Basket Assembly
- Outer Tub Assembly

REMOVAL

1. **Disconnect power to the unit.**

2. To raise the top assembly, insert a thin-bladed tool (such as a putty knife) between the front panel and top assembly approximately three (3) inches in from each corner. While raising the top assembly, depress each spring clip ***(Figure 4-10).***

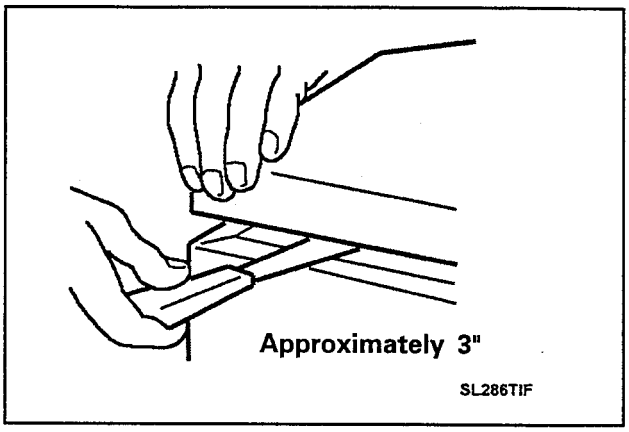

Figure 4-10

3. Raise the top cover assembly and remove the flume inlet hose from the water valve.

4. Lower the top and remove the control panel rear shield.

5. Disconnect the pressure switch hose and all necessary wiring. Feed the hose and wiring through their respective top holes.

6. While pulling forward, slightly raise the top cover assembly forward and remove.

STANDARD LID ASSEMBLY

The washer and lid assembly consists of the lid, mounting hinges, plastic lid switch cam (switch actuator) and condensation seal with bumpers. The assembly is secured to the top panel by the two mounting hinges.

When the washer lid is lowered, the plastic lid switch cam protrudes through a slot in the rear of the top cover and depresses a plunger that actuates the lid switch ***(Figure 4-11).***

©1999 Maytag Appliances Sales Company

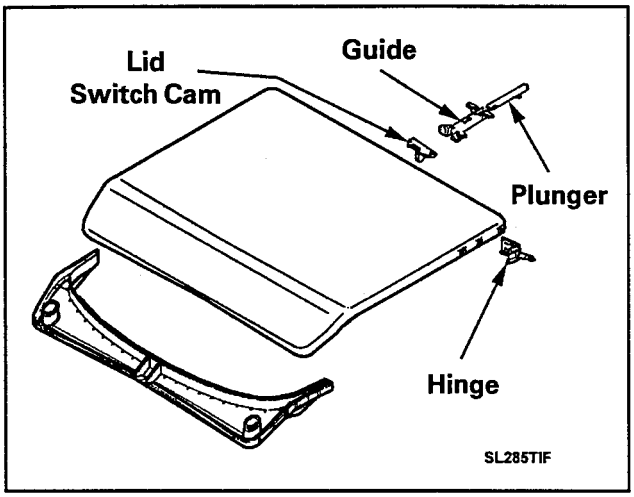

Figure 4-11

REMOVAL

1. Lift the washer lid.

2. Locate the left hinge and lift the locking tab in the center of the hinge from the locating hole in rear edge of the lid ***(Figure 4-12).***

3. Gently pry the hinge toward the center of the lid. This will draw the pin of the hinge out of the bushing in the top cover ***(Figure 4-12).***

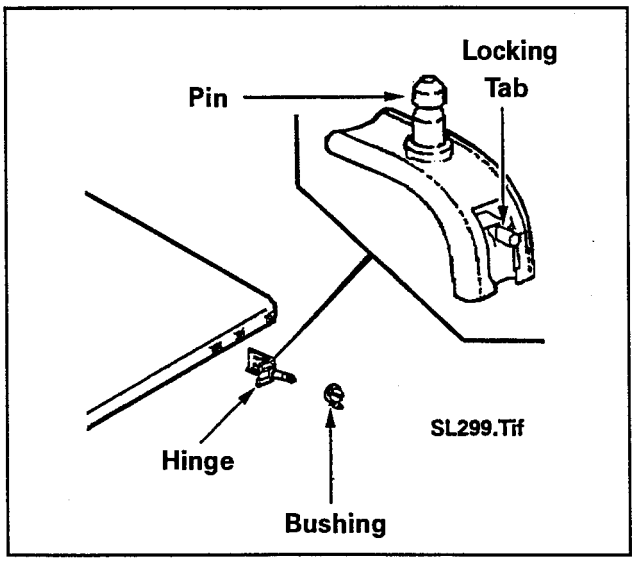

Figure 4-12

4. With the left hinge removed, grasp the lid and pull the lid away from the right hand bushing in the top cover.

REPLACEMENT

1. Reverse steps 1 through 4.

---

30 DAY DETERGENT DISPENSER (Optional Accessory)

The Dosing Lid Assembly consists of the detergent reservoir, dispenser valve assembly, cap and twist locks.

The reservoir stores liquid detergent and will dispense the detergent directly into the spin basket when the actuator is manually depressed. The detergent reservoir is secured into the lid by four twist locks.

Removal of Reservoir

1. Turn each of the twist locks on the face of the detergent reservoir 1/4 turn counterclockwise ***(Figure 4-13).***

2. Pull the bottom of the reservoir away from the lid and unhook the top of the reservoir from under the lip of the lid.

Removal of Valve Assembly

1. Locate the locking clip below the dispensing button ***(Figure 4-14).***

2. Depress the dispensing button while sliding the retaining clip down. This will release the plunger and dispensing button and allow removal.

©1999 Maytag Appliances Sales Company

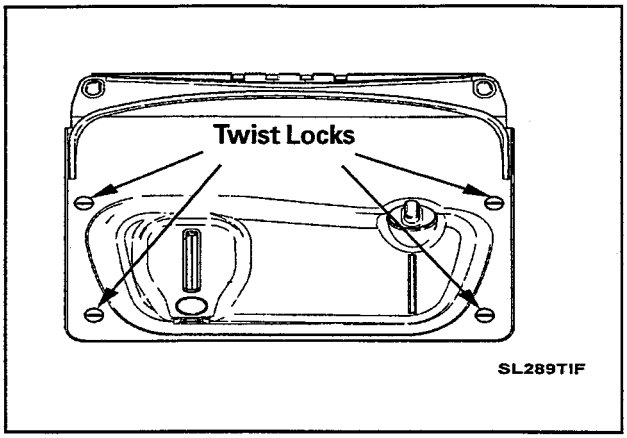

Figure 4-13

Warning: ***The spring in the valve assembly is compressed and may fly out of the dispenser. Depressing the plunger button during clip removal will prevent this from occurring.***

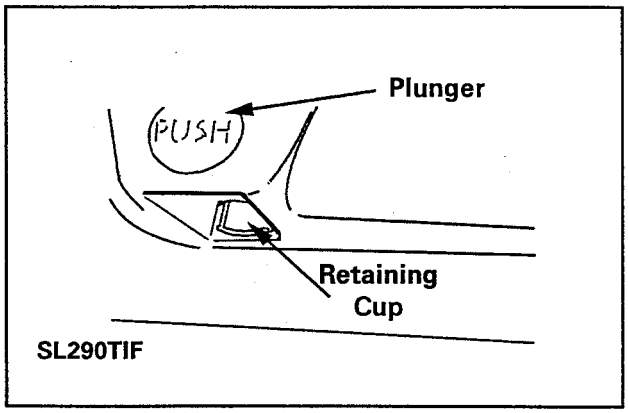

Figure 4-14

TORSION ROD ASSEMBLY

The torsion rod assembly acts as a counter balance when liquid detergent is in the dispenser. This allows for easier opening and closing of the washer lid.

REMOVAL

1. Lift the washer lid and remove the detergent reservoir.

2. Remove the center support from the torsion rod by rolling the support toward you.

3. Slide the left retainer toward the center of the lid and remove from behind the lid flange ***(Figure 4-15).***

4. With the left retainer removed, grasp the lid vertically and rotate the torsion rod in a clockwise direction away from the right hand plastic bushing in the top cover.

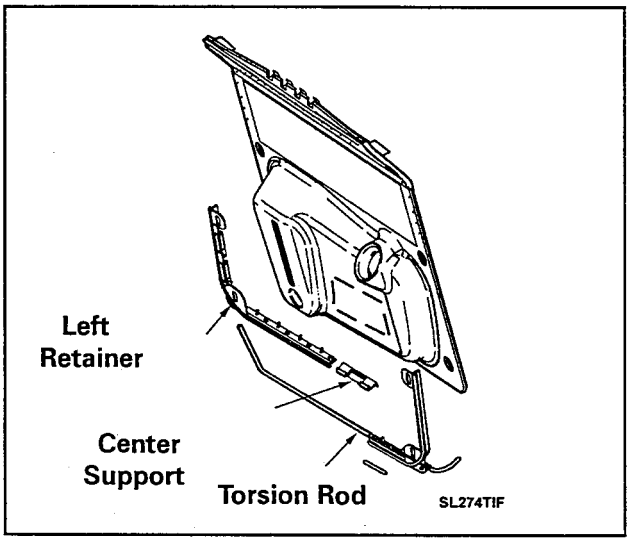

Figure 4-15

DETERGENT DISPENSING

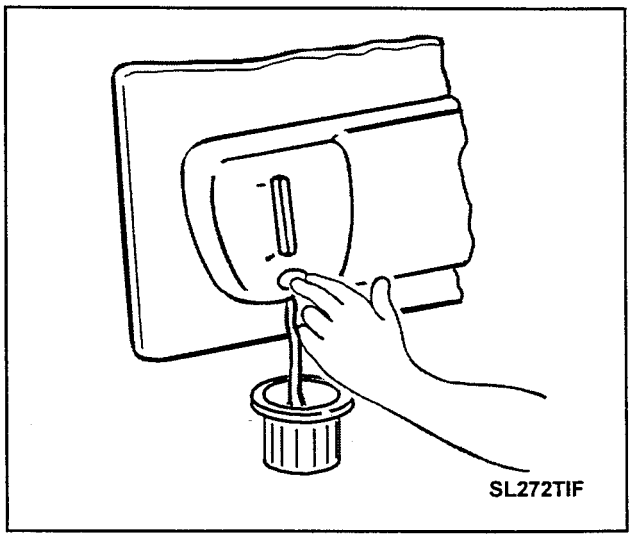

Figure 4-16

1. After initially filling the reservoir of the dispenser, lower the lid to fill the dispensing chamber on the left side of the dispenser.

©1999 Maytag Appliances Sales Company

2. Position the cap of the detergent bottle being used under the spout of the dispenser.

3. Press and hold the button and dispense liquid into the cup until the desired amount has dispensed.

4. Slide the plastic indicator down the sight window until even with the detergent shown.

5. The next time the lid is lowered and raised, the sight window will fill with liquid detergent. By depressing the button until the level in the sight window is even with the indicator, will provide uniform dispensing of detergent brand being used.

NOTE: ***Empty dispenser completely before refilling. Do not mix different detergents.***

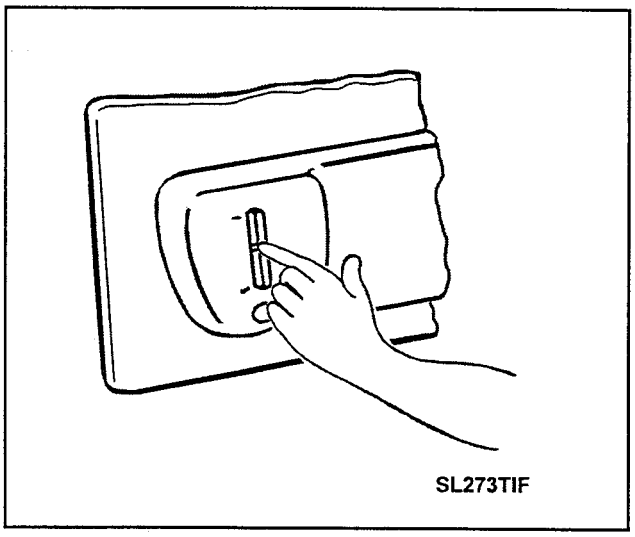

Figure 4-17

CLEANING THE DISPENSER

Mixing different liquid detergents in the reservoir can cause the detergent to clump and clog the dispenser outlet. In which case, cleaning out the reservoir is necessary.

1. Remove the dispenser from the lid ***(See Removal of Reservoir Page 4-6).***

2. Remove the dispenser valve assembly and rinse with warm water ***(See Removal of Valve Assembly Page 4-6).***

3. Fill the dispenser with hot or warm water and gently tilt the dispenser forward and back to flush the water around inside the dispenser.

4. Turn the dispenser vertically so the fill cap is facing up and remove the cap. Pour the contents out and repeat the process until dispenser is flushed. **NOTE:** ***Water will flow out of the dispenser valve area.***

5. Reinstall the dispensing valve assembly into the reservoir. While depressing the button, replace the clip onto the valve assembly.

6. Reinstall the reservoir into the lid and secure the twist locks.

7. Close and open the lid.

8. Press the "PUSH" button (plunger) to release any remaining water/detergent. Repeat steps 7 & 8 until no more water can be drained from the dispenser. It is normal for a small amount of water to remain in the dispenser after cleaning.

9. Refill the dispenser with liquid detergent. The reservoir will hold 100 fluid ounces at one time.

FRONT PANEL

The front panel is attached to the cabinet side flanges via screws at the top and secured at the bottom with base mounting clips. Locating tabs on the front panel flanges position the top cover for assembly ***(Figure 4-18).***

The front panel provides mounting for the locating tabs and top clips. A plastic support brace is wedged in the center of the panel for support.

©1999 Maytag Appliances Sales Company

Front panel removal will allow access to the:

- **Motor**
- **Motor Mount**
- **Motor Wiring**
- **Motor Pivot Spring**
- **Suspension Springs**
- **Tub Brace**
- **Pump**

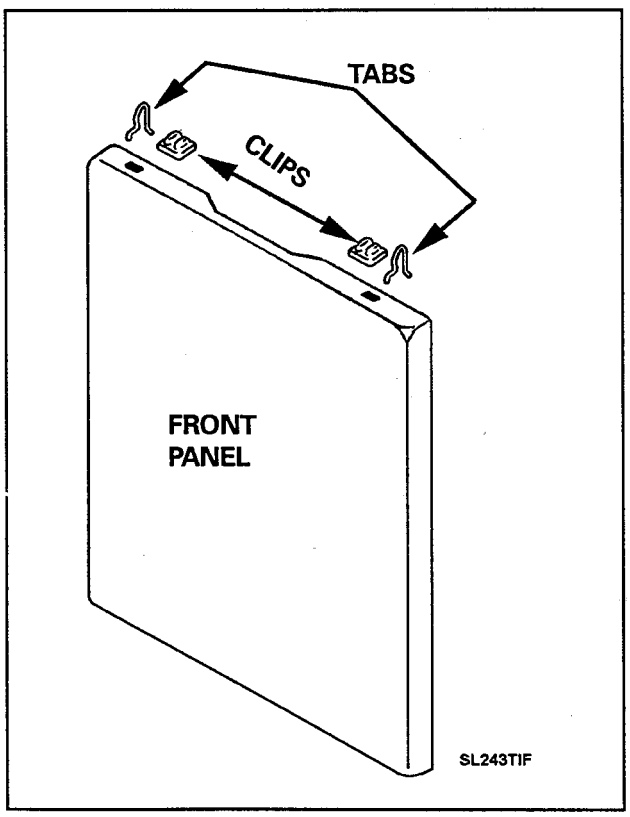

Figure 4-18

REMOVAL

1. **Disconnect power to the unit.**

2. Insert a thin-bladed tool between the front panel and the top cover assembly, approximately three (3) inches in from each corner. While lifting up on the top cover assembly, press the blade against the wire clips, one side at a time to disengage them. Lift the top cover up to a stationary position.

3. Remove the two 5/16" hex/cross head screws securing the front panel to the upper front corner braces of the cabinet. ***(Figure 4-19 & 4-20)***

4. Move top edge of front panel away from cabinet while lifting. This will disengage the bottom of front panel from base clips.

REPLACEMENT

1. Reverse above steps.

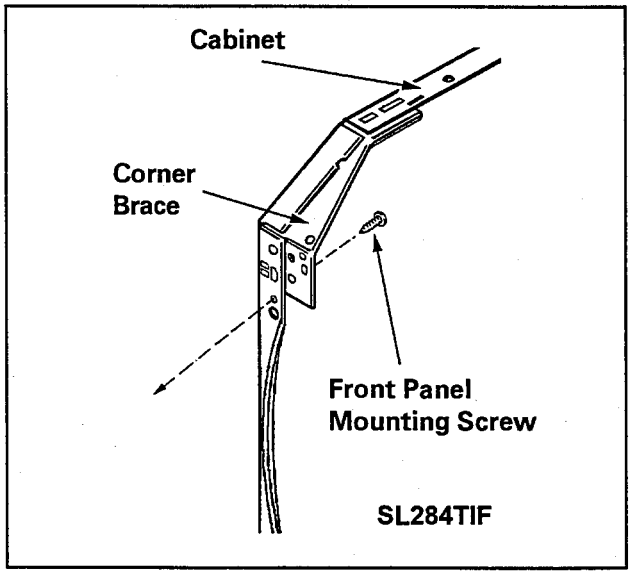

Figure 4-19

REAR ACCESS PANEL

Removal of the access panel, gains access to the rear inside components of the washer.

Panel removal will allow access to:

- **Stabilizer Assembly**
- **Rear and Side Suspension Springs**
- **Tub Braces**

REMOVAL

1. Remove the four screws surrounding the access panel ***(Figure 4-20)***.

©1999 Maytag Appliances Sales Company

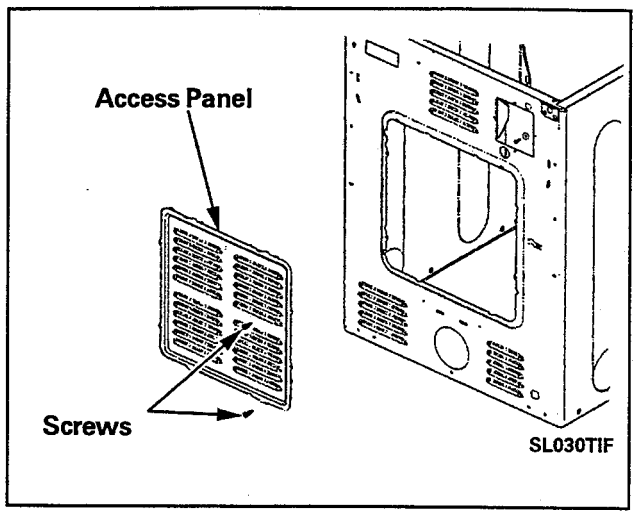

Figure 4-20

CABINET BODY ASSEMBLY

The cabinet provides mounting for the front panel, rear access panel, top cover assembly, water valve and the power cord.

The cabinet is attached to the perimeter of the base with eleven (11) screws.

REMOVAL

1. **Disconnect power to the unit.**
2. Remove the top cover ***(See TOP COVER REMOVAL - Page 4-3).***
3. Remove the front panel ***(See FRONT PANEL REMOVAL - Page 4-8).***
4. Remove the power cord.
5. Remove rear access panel and drain hose cover.
6. Remove water valve and bracket.
7. Remove wiring clips and clamps from inner cabinet rear.
8. Remove front cross braces and screws.
9. Remove the eleven (11) screws that secure the cabinet body to the perimeter of the base.
10. Open the front of the cabinet body slightly and push if off the rear of the base frame.

BASE ASSEMBLY

The base assembly, which serves as a support for the entire wash unit, is constructed of heavy gauge metal that has been flanged and embossed for strength.

There is a spherical configuration on the lower end of the brake/transmission/tub assembly. This spherical shape rides on the raised dome-like area in the center of the base. The mounting is similar to a ball joint and allows the housing to move freely in all directions ***(Figure 4-21).***

The base assembly also provides mounting for the pump assembly, motor and plate assembly, suspension springs, front panel clips, and the stabilizer assembly.

The cabinet is secured to the base with screws and positioned foam pads to prevent vibration or noise transfer. The cabinet does not support any of the wash unit's weight.

BASE REPLACEMENT

1. **Disconnect power to the unit.**
2. Tip unit back and remove the drive belt.
3. Remove the drain hose cover from the cabinet rear and disconnect the discharge hose from the pump outlet.
4. Remove the top cover ***(See TOP COVER REMOVAL - Page 4-3).***
5. Remove the front panel ***(See FRONT PANEL REMOVAL - Page 4-7).***

©1999 Maytag Appliances Sales Company

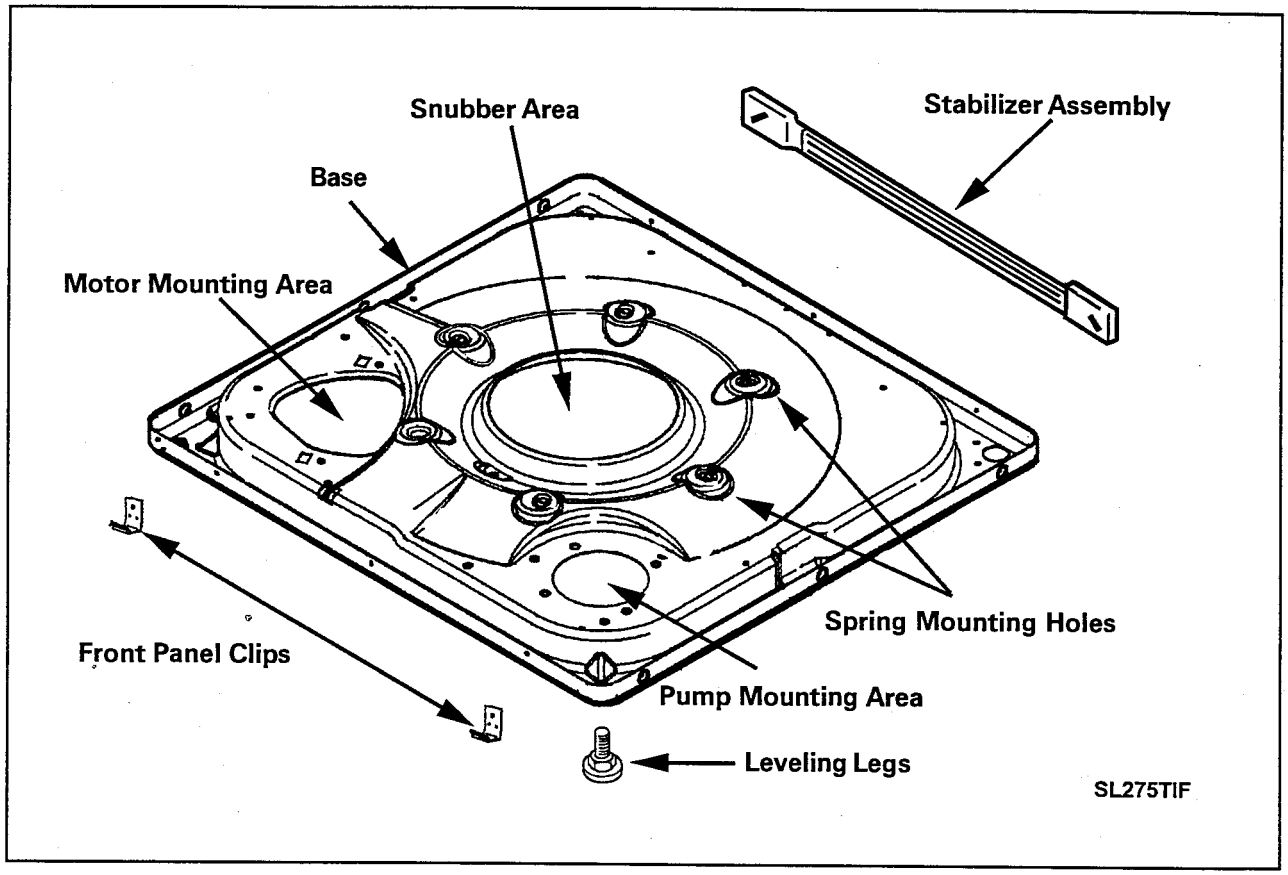

Figure 4-21

6. Disconnect lower wiring from the cabinet rear (water mixing valve, power cord, etc.) and remove pressure switch hose from tub air bell.

7. Remove the screws attaching the cabinet to the base.

8. Remove lower screws on cross braces.

9. Push the front of the cabinet slightly back and carefully push or pull it off the rear of the base assembly.

10. Disconnect the pump hose from the tub outlet and remove the pump assembly and hose from the base.

11. Remove motor mounting screws, ground wire and wiring clips from base. Lift the motor and plate assembly from the base.

12. Remove the suspension springs ***(See SPRING REMOVAL, Page 6-2 thru 6-3).***

13. Remove the stabilizer assembly from the base assembly, as detailed later in this section.

14. Transfer the remaining hardware from the defective base to the replacement.

15. Installation is a reversal of the above procedure.

©1999 Maytag Appliances Sales Company

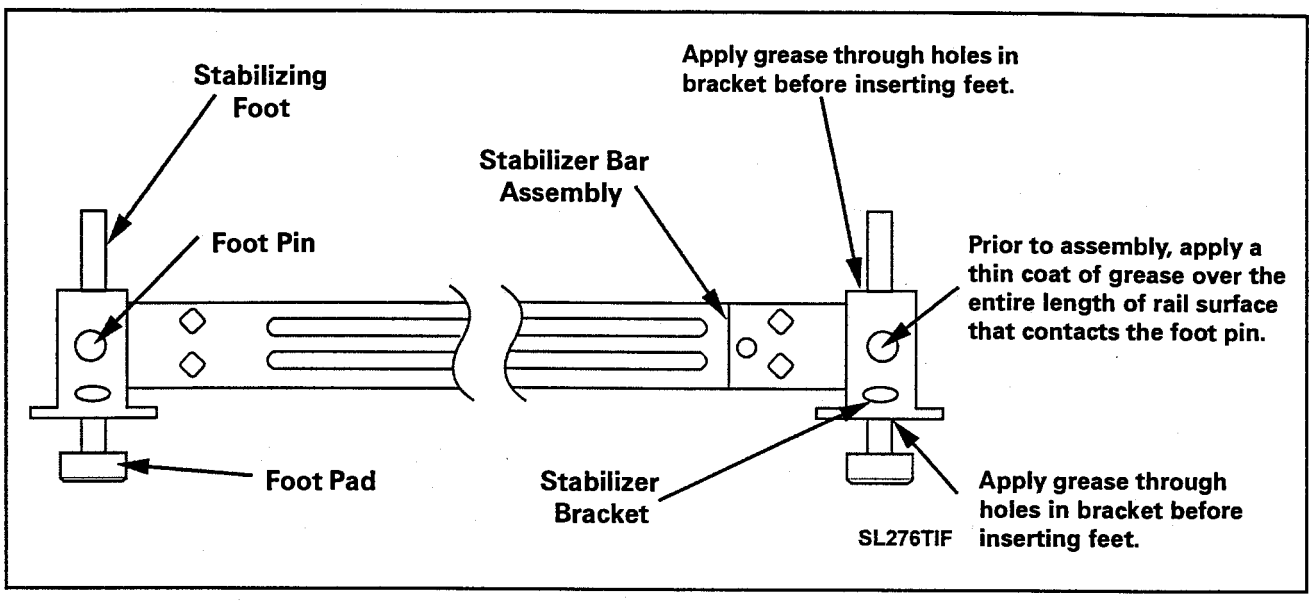

Figure 4-22

STABILIZER ASSEMBLY

The stabilizer assembly consists of the stabilizer bar assembly, two (2) stabilizer brackets, two (2) self stabilizing feet, and two (2) foot pins. It is mounted on the top rear of the base assembly.

The stabilizer assembly allows the base assembly to rest solidly and firmly against the floor, even if the floor is unlevel. The solidity of the base to the floor keeps the washer from rocking back and forth or "walking" during operation.

As the name implies, the stabilizer only stabilizes the unit; it does not level it. Any leveling that is required must be done with the front adjusting (leveling) legs.

In rare cases where the floor is so uneven that it is beyond the stabilizing limit of the assembly (+ or - 5/8"), it may be necessary to remove the stabilizer assembly and install two (2) rear adjustable feet. Two (2) threaded holes have been provided in the rear corners of the base for this situation. A kit, part number **12001577** is available.

REMOVAL

1. **Disconnect power to the unit.**
2. Remove the access panel from the cabinet rear.
3. Tip or lay washer down, either forward or on the side. Remove the screws from the underside of the base that attaches the stabilizer assembly to the rear of the base ***(Figure 4-21).***
4. Remove the stabilizer assembly through the rear access panel.
5. To disassemble the stabilizer assembly after removal, drive the two (2) foot pins out of the feet and brackets.

NOTE: ***In order for the stabilizer assembly to operate properly, a thin coating of grease must be applied over the entire length of the four (4) pin guides as well as the foot holes in the bracket (Figure 4-11).***

©2000 Maytag Appliances Sales Company

TOP COVER TO CABINET HINGE

Some models will have a plastic hinge assembly holding the main top to the cabinet. ***(Figure 4-1)***

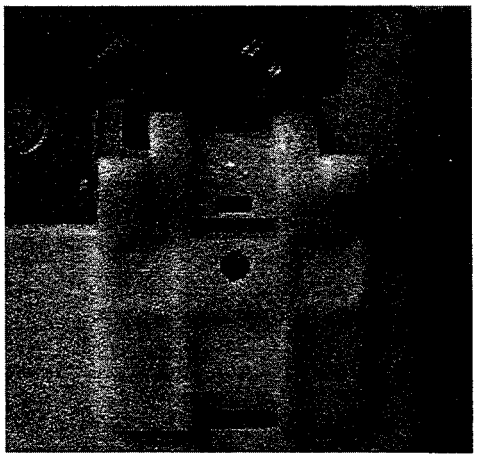

Figure 4-1

The hinge assembly is removed from the unit by lifting the main top about 2 inches and sliding it forward. The hinge is then removed by pushing up and out on the lower tab and lifting the hinge up to release it from the cabinet. ***(Figure 4-2)***

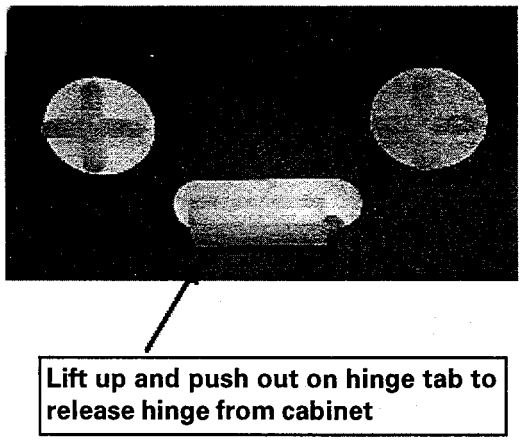

Figure 4-2

©2000 Maytag Appliances Sales Company

SECTION 5. WATER - RELATED COMPONENTS

Warning **- Always shut off electrical power to the washer before beginning any service repair procedures.**

WATER MIXING VALVE

The water mixing valve is located inside the left rear cabinet area, when viewing from the front. It is secured by two (2) screws inserted through the valve bracket and into the cabinet. The hot and cold water supply inlet hoses are attached to the nozzles of the water valve.

The mixing valve will allow hot or cold water, or a mixture of the two as called for by the control circuitry, to enter the machine through the inlet hose and inlet flume.

Usually, the temperature of the warm water entering the machine will be about halfway between the cold and hot water temperatures delivered to the valve. This will occur when the flow rate of both are equal.

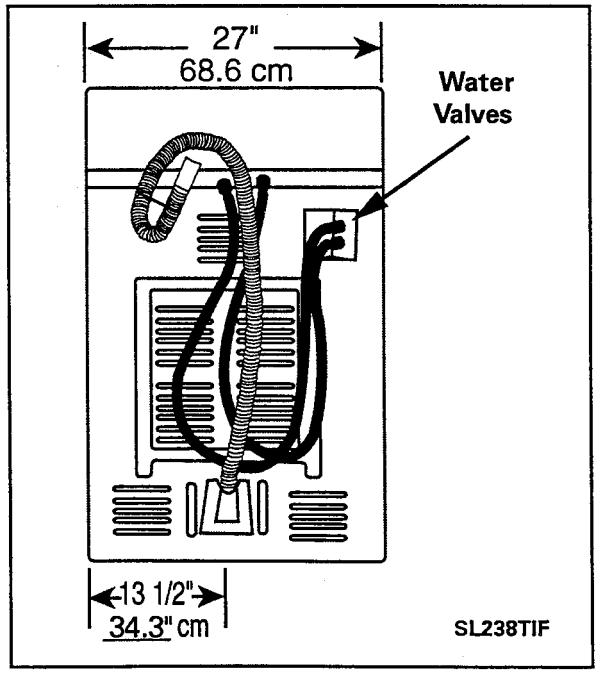

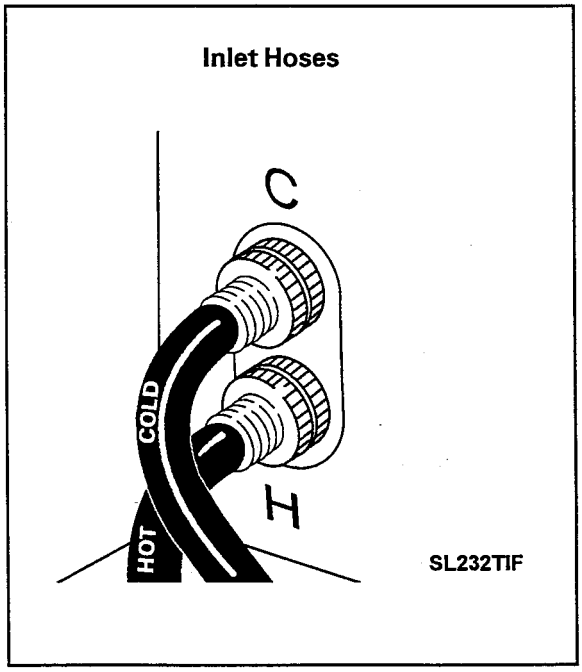

Figure 5-1

©1999 Maytag Appliances Sales Company

WATER INLET FLUME

The molded plastic water inlet flume consists of an upper and lower section that has been snap-locked together.

The flume is located on the rear underside of the washer top assembly. The flume fits flush with the top opening and is secured to the top by one mounting screw, accessed through the control console. An inlet hose from the water mixing valve connects to the flume nozzle.

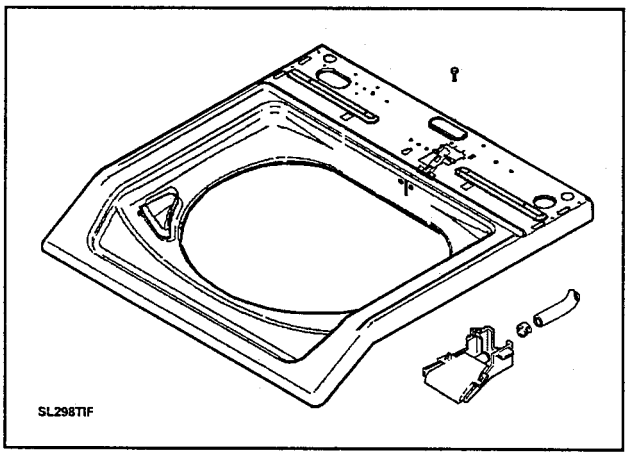

Figure 5-2

AIR BELL

A polypropylene air bell and nipple assembly have been thermally welded to the lower, outer tub, rear. One end of the pressure switch hose connects to the air bell nipple and the other end is attached to the water level switch.

As the water level rises in the tub, it compresses the air in the air bell and the attached hose. The compressed air inside the hose will activate the pneumatically operated water level switch when the selected water level has been reached. When the air pressure is lowered during the drain cycle, the switch will reset.

NOTE: ***When reinstalling the pressure switch hose, make sure the system is free of air leaks and water in the hose or an overflow condition will occur.***

HOSES

Water Supply Inlet Hoses

Two (2) water inlet hoses attach from hot and cold water supply lines to their respective nozzles on the water mixing valve. They are secured at both ends with threaded couplings.

Flume Inlet Hose

The flume inlet hose attaches the water mixing valve to the water inlet flume. It is secured at both ends with spring type hose clamps.

Pressure Switch Hose

The pressure switch hose is made of soft plastic tubing and fits snugly over the water level switch nipple at one end, and the air bell nipple at the other. A clamp on the inner cabinet rear positions the hose, and a pad prevents the hose from contacting the back of the cabinet during operation. The hose is installed with its ends seated against the switch and air bell bodies, and is secured at the tub ends with a spring type hose clamp.

Tub to Pump Hose

The tub to pump hose attaches from the drain outlet on the tub to the pump inlet. It is secured at each end with a spring-type hose clamp.

Drain Hose

The drain hose attaches the pump outlet to the drain standpipe. It is secured to the pump with a spring-type hose clamp.

©1999 Maytag Appliances Sales Company

TUB TOP

The tub top is constructed of molded polypropylene. It is secured to the tub by eight (8) tabs which have been formed around its upper edge. These tabs snap over mating tab locks which are molded around the upper sides of the tub.

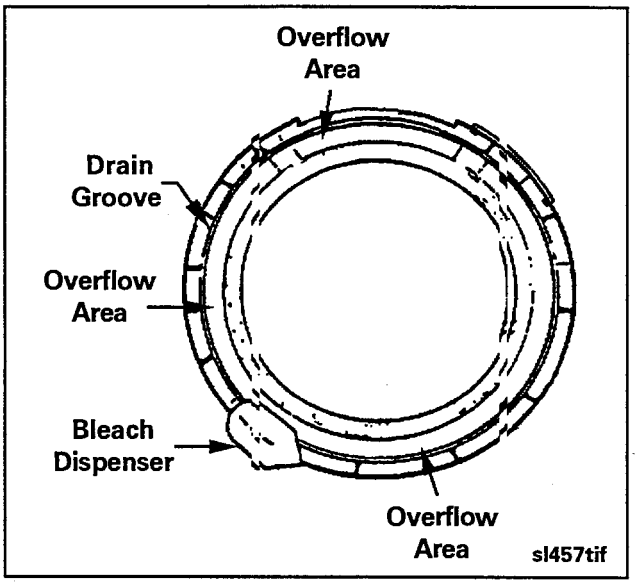

Figure 5-3

Designed into the tub top is a drain groove, an overflow area, and a bleach dispenser. In case water should splash out of the basket during machine operation, the ***drain groove*** directs the water back into the tub. The ***overflow*** area is located at the tub top rear and will direct any overflow water away from the drive motor. The ***bleach dispenser*** is functional only when used in conjunction with the proper cabinet top assembly which is available on designated models.

A foam seal has been installed in a groove on the underside of the tub top. The seal provides a water seal between the tub and the tub top.

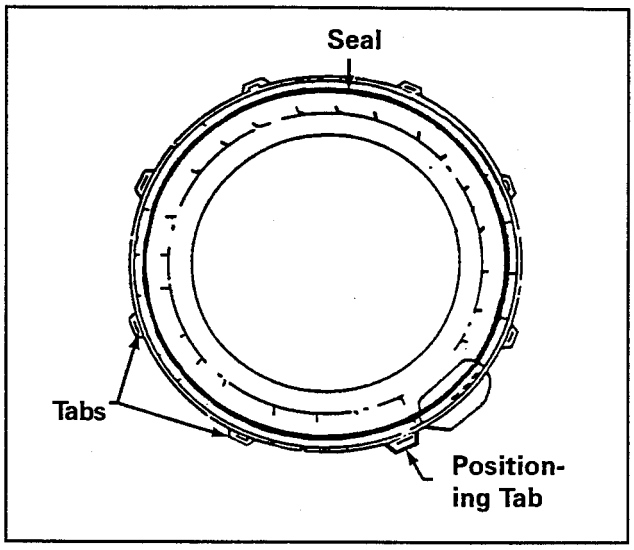

Figure 5-4

It is necessary to remove the tub top before removing the inner tub. To remove the tub top, push down on it while disengaging the tabs from the tab locks on the tub.

NOTE: ***When reinstalling the tub top, please observe the following:***

1. Make sure the foam seal is in place on the underside of the tub top.

2. Align the tab (Position 7:30- looking down on the tub top) having the larger opening with its mating tab lock on the tub, and lock it down around the tub. This seals the top.

AGITATOR

The agitator is composed of an auger and a base. The base is a four-vane design molded from a polypropylene compound. It is tough flexible material, highly resistant to breakage. The agitator is mounted on the splined shaft and secured with the agitator retaining screw and washer. A fabric softener dispenser snaps over the top of the agitator ***(Figure 5-5).***

©1999 Maytag Appliances Sales Company

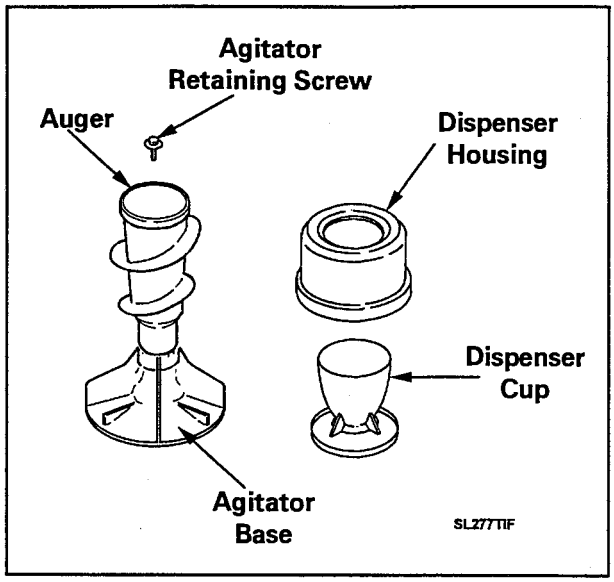

Figure 5-5

INNER TUB

The inner tub is perforated in a pattern designed to allow free flow of the wash and rinse water for maximum efficiency in removing sediment, soil deposits, and lint.

The inner tub is constructed entirely of polypropylene and is secured to the basket hub assembly with four (4) mounting screws. A foam gasket is installed between the basket and the basket hub assembly.

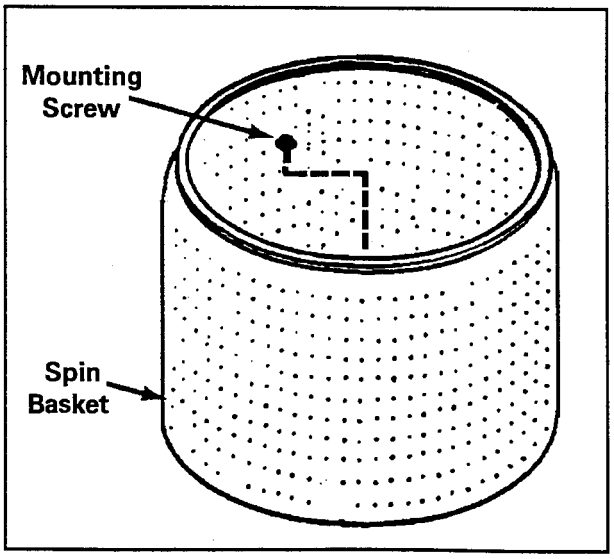

Figure 5-6

REMOVAL

1. **Disconnect power to the unit.**
2. Raise the top assembly and lean it back.
3. Remove the tub top.
4. Remove the agitator.
5. Remove the mounting screws.
6. Lift the inner tub up over the center post and out of the cabinet.

NOTE: ***When reinstalling the inner tub, be sure to:***

- Clean all connecting surfaces to ensure proper sealing.
- Position the basket on the basket hub assembly.
- Align the assembly and tighten all screws securely.

OUTER TUB ASSEMBLY

The outer tub assembly is molded entirely of polypropylene.

The outer tub assembly is mounted to the bearing and seal housing and to the tub support. A foam gasket and a rubber seal are installed between the tub bottom and the bearing and seal housing.

©1999 Maytag Appliances Sales Company

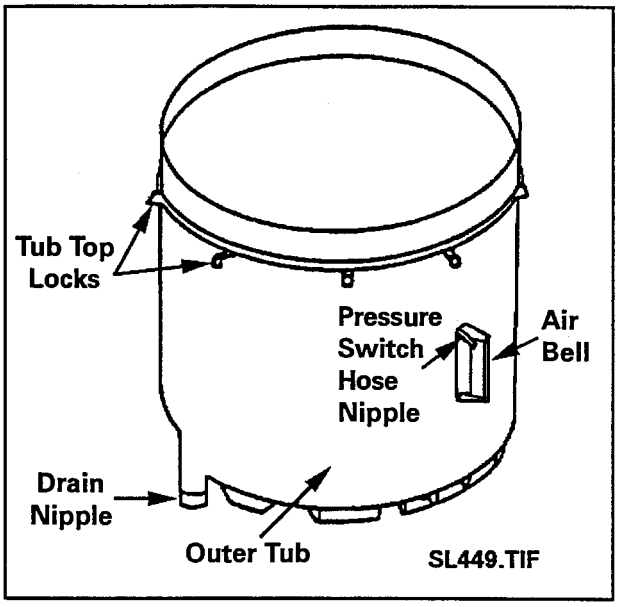

Figure 5-7

REMOVAL

1. **Disconnect power to the unit.**
2. Remove the inner tub.
3. Remove the front panel.
4. Disconnect the pump inlet hose from the outer tub outlet.
5. Remove the screws located on each side of the tub brace bolts which secure the tub to the tub support.
6. Remove the mounting screws on the inside of the tub which mount the tub to the bearing and seal housing.
7. Disconnect air dome hose.
8. ***PROTECT THE AIR BELL NIPPLE*** and lift the tub from the cabinet.

NOTE: ***The air bell nipple is fragile, handle carefully.***

NOTE: ***When reinstalling the tub assembly, be sure to:***

- **Protect the air bell nipple.**
- Clean all connecting surfaces to ensure proper sealing.
- Position the gasket and seal on the bearing and seal housing.
- Tighten all screws securely.

PUMP ASSEMBLY

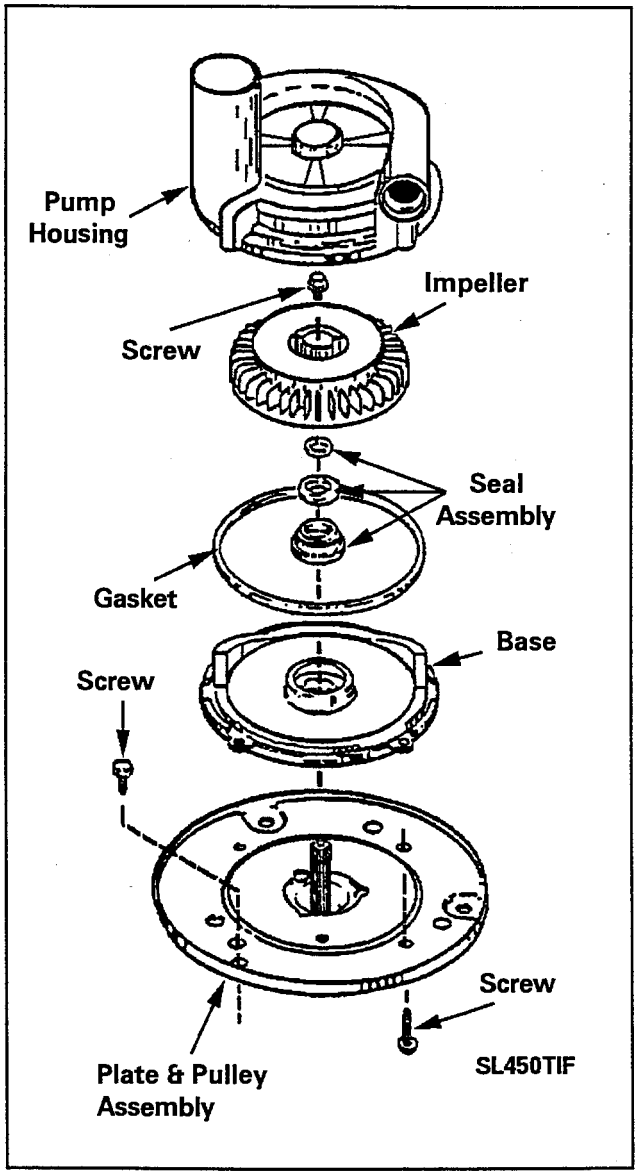

Figure 5-8

©1999 Maytag Appliances Sales Company

The pump assembly is located on the right front corner of the washer base.

The pump pulley is engaged to the drive belt at all times and will be operating in both motor directions: Clockwise during agitation and counterclockwise during spin. The pump is designed so it will only discharge water from the machine when it is running in the counterclockwise, or spin direction.

REMOVAL

1. **Disconnect power to the unit.**
2. Remove the front panel.
3. Remove the drain hose from the pump outlet.
4. Disconnect the pump inlet hose.
5. Remove the three (3) screws which mount the pump assembly to the base.
6. Slide the pump to the rear to disengage the belt from the pulley.

NOTE: ***If this is done carefully, the belt will remain on the motor and transmission drive pulley, making installation easier.***

REPLACEMENT

Place one hand through the pump opening and lift belt. Set the pump pulley into the opening and place the belt on the pulley. While holding tension on the belt to keep it on the pulleys, install the mounting screws.

DISASSEMBLY

1. Remove the pump from the washer base.
2. Remove the four (4) screws that secure the housing to the pump base, and lift off the housing.
3. Remove the screw that secures the impeller.
4. Using two (2) screwdrivers, one on each side of the impeller, carefully pry the impeller off the spline shaft.
5. Work the seal mating ring and "O" ring up and off the shaft.

©1999 Maytag Appliances Sales Company

WATER VALVE INJECTION SYSTEM

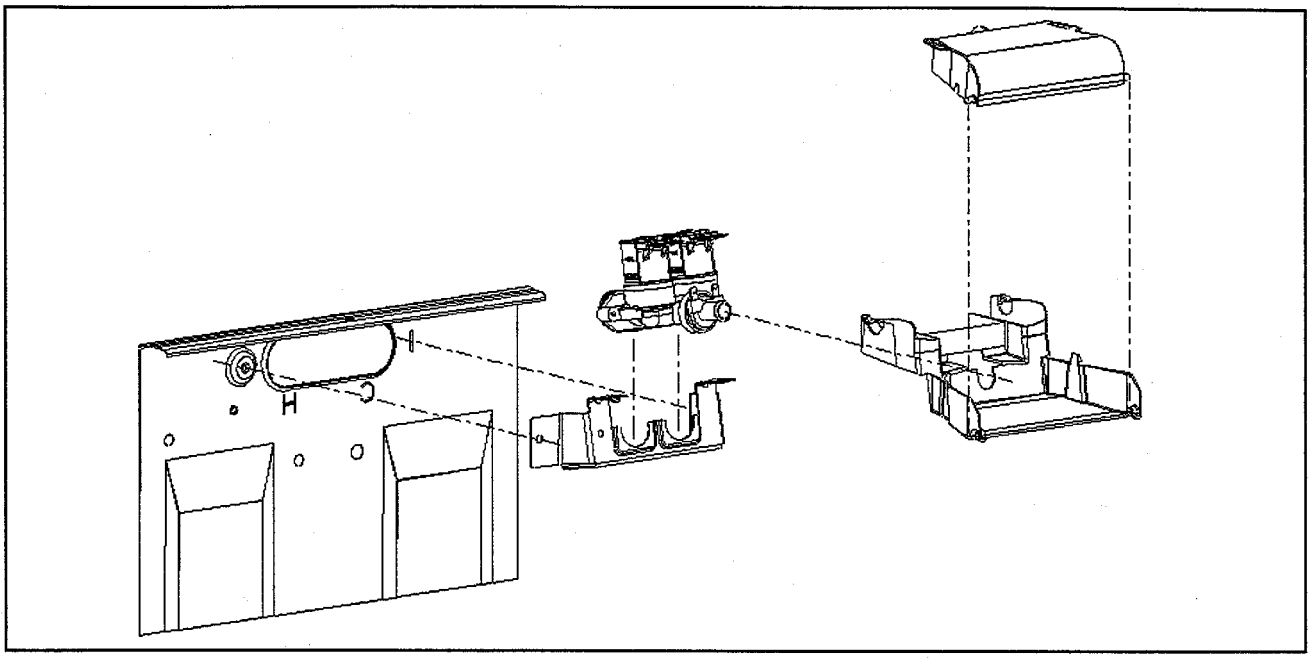

On some models the water valve is installed at the top rear of the cabinet ***(Figure 5-1)***. The following procedures are used to remove the water valve.

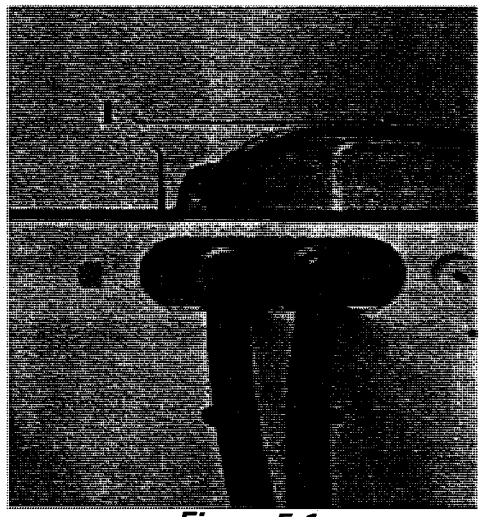

Figure 5-1

To raise the top asssembly, insert a thin bladed tool (such as a putty knife) between the front panel and top assembly approximately three inches in from each corner. While lifting up on the top cover assembly, press the blade against the wire clips, one side at a time to disengage them.

Lift the top cover up to a stationary position. ***(Figure 5-2)***

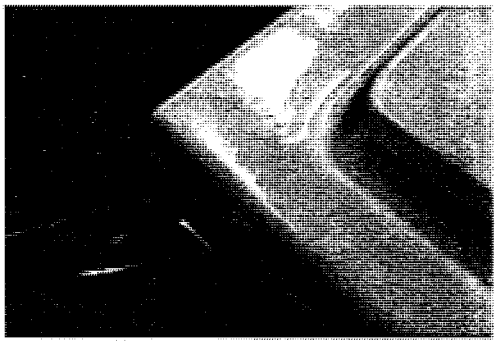

Figure 5-2

With the top assembly up you will have access to the water valve assembly. ***(Figure 5-3)***

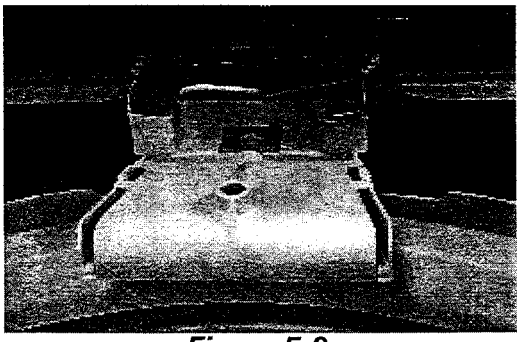

Figure 5-3

©2000 Maytag Appliances Sales Company

The water valve is held to the cabinet by one screw. ***(Figure 5-4)***

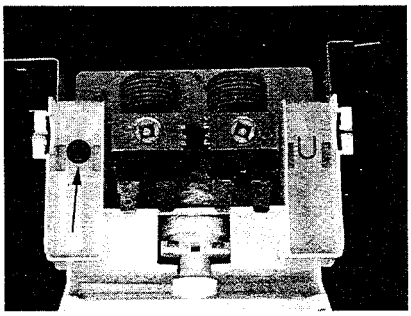

Figure 5-4

Remove the screw and swing the bracket and valve assembly to the right to release the bracket from the cabinet. ***(Figure 5-5)***

The fill hoses can be removed at this point.

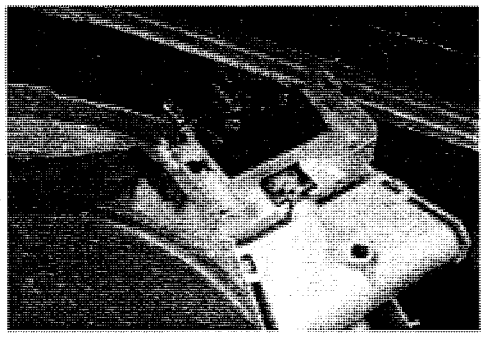

Figure 5-5

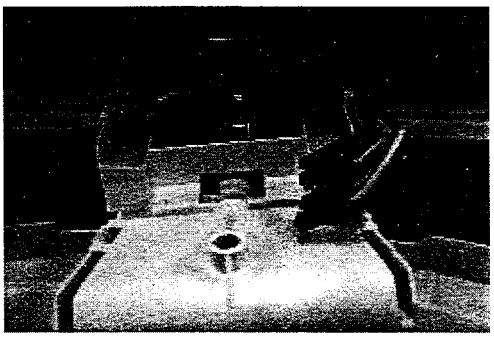

Figure 5-6

BE SURE THE WATER IS TURNED OFF. ***(Figure 5-7)***

The water valve is held to the bracket by one screw and a tab molded into the plastic part of the bracket. ***(Figure 5-8)***

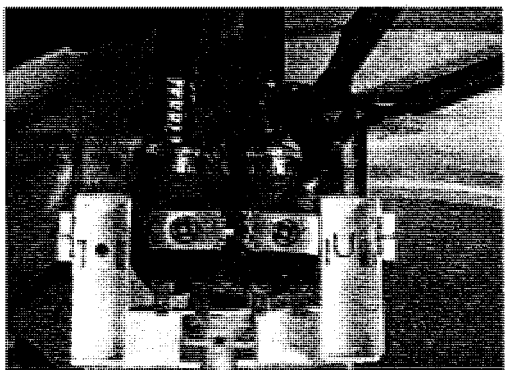

Figure 5-7

Remove the wiring from the water valve. ***(Figure 5-6)***

Remove the screw and using a small flat bladed screw driver, carefully pry up on the plastic tab to release the water valve from the bracket. ***(Figure 5-9)***

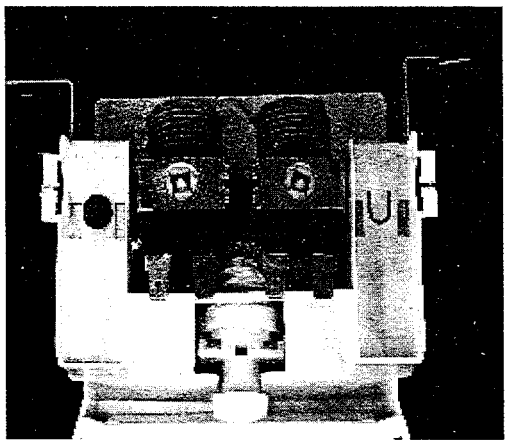

Figure 5-8

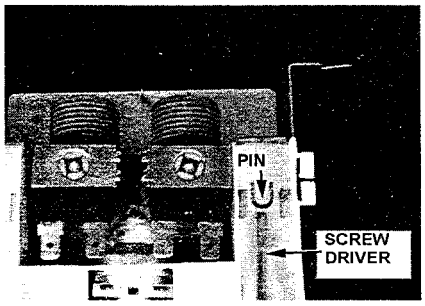

Figure 5-9

©2000 Maytag Appliances Sales Company

Slide the metal part of the bracket out of the slots in the plastic part of the bracket. ***(Figure 5-10)***

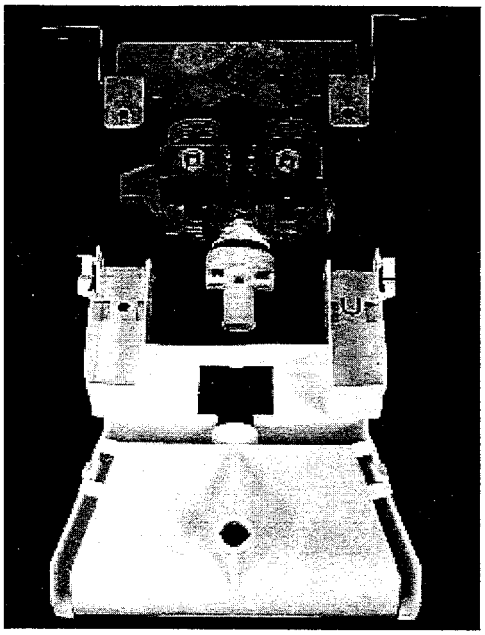

Figure 5-10

Installation of the water valve is the reverse of the above procedure.

Stainless Steel Spinner Assembly

The stainless steel spinner is composed of a crimped stainless steel basket and a polypropylene spinner top. There is a lower insulating ring attached to the bottom of the spinner and an upper insulating ring that fits over the inner spinner bottom. These insulating rings provide stability to the lower spinner area. When replacing a spinner it is recommended that the insulating rings be replaced with the spinner assembly.

Removal:

1. **Disconnect the power to the unit.**
2. Raise the top assembly and lean it back.
3. Remove the tub top.
4. Remove the agitator
5. Remove the mounting screws.
6. Remove the upper insulating ring. ***(Figure 5-11)***

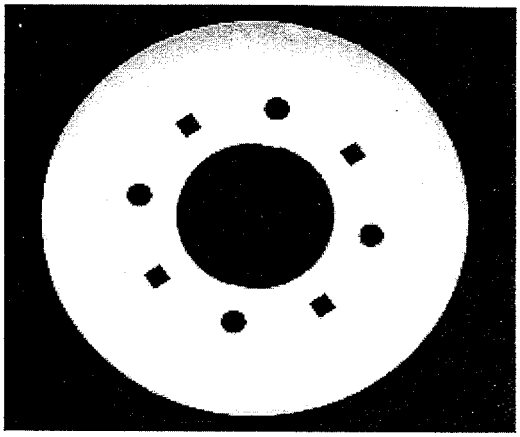

Figure 5-11

7. Lift the spinner up over the center post and out of the cabinet
8. Depress the six (6) tabs ***(Figure 5-12)*** that hold the spinner top to the spinner and remove the spinner top.
9. Depress the four (4) tabs that hold the lower insulating ring to the bottom of the spinner and remove. ***(Figure 5-12)*** These four (4) tabs are not necessary for correct machine operation. These tabs are used to assist in the manufacturing process. If one or more break during removal, the part is still functional. ***(See Figures 5-13 thru 5-14)***

©2000 Maytag Appliances Sales Company

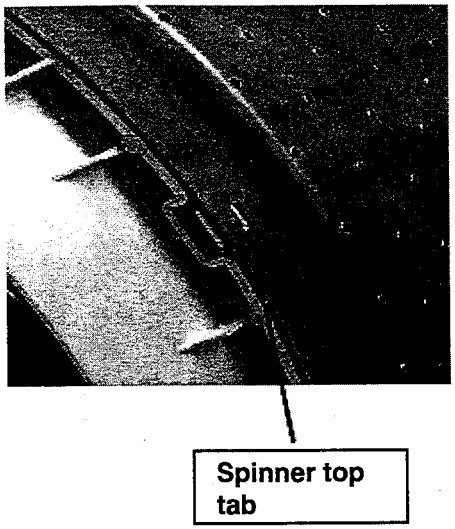

Figure 5-12

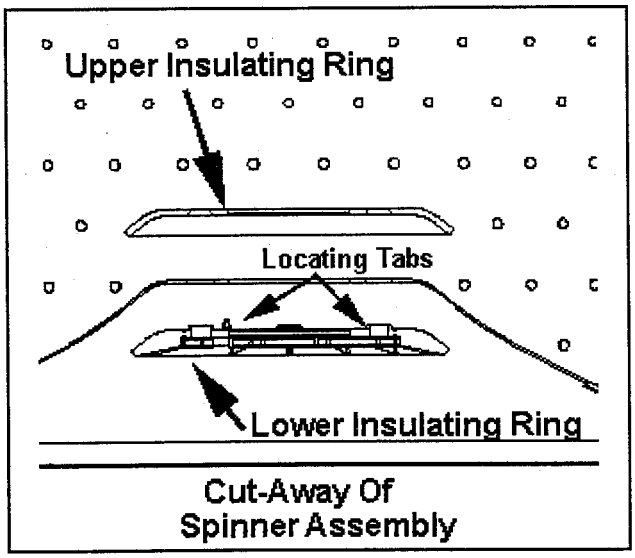

Figure 5-13

NOTE: When reinstalling the spinner assembly, be sure to:

- Clean all connecting surfaces to ensure proper sealing.
- Position the basket on the basket hub assembly.
- Align the assembly and tighten all screws securely.

©2000 Maytag Appliances Sales Company

SECTION 6. SUSPENSION SYSTEM

Warning **- Always shut off electrical power to the washer before beginning any service repair procedures.**

The washer utilizes a six-point suspension system which consists of the suspension housing, snubber pad, tub braces, suspension springs and related hardware.

The six-point system features six springs. Three springs are installed between the base and the top of the tub brace. The other three are between the base and special spring hooks attached to the tub support perimeter ***(Figure 6-1).***

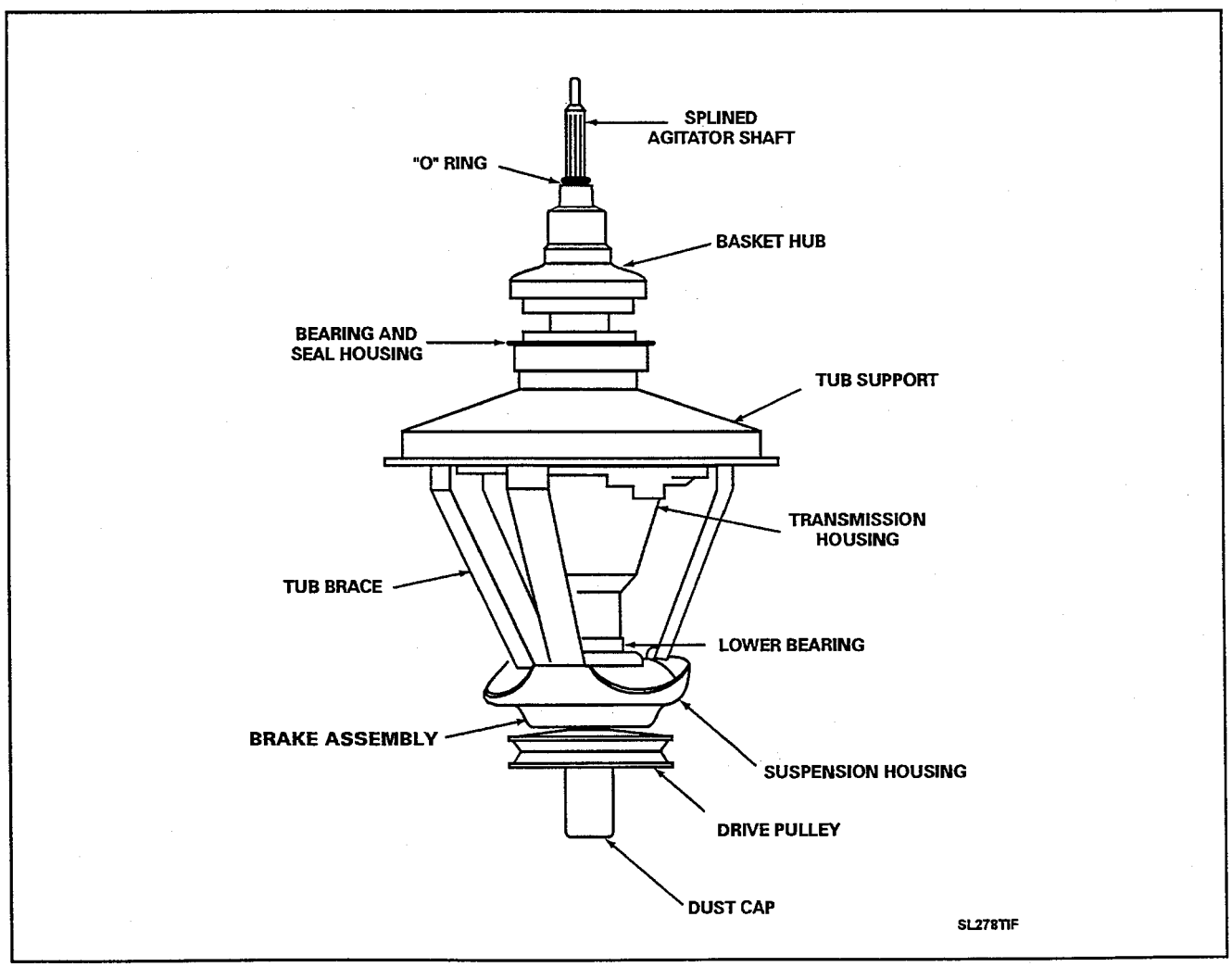

Figure 6-1

©1999 Maytag Appliances Sales Company

SUSPENSION HOUSING

The suspension housing is fabricated of heavy gauge steel. It rests on the raised domelike area in the center of the base and supports the weight of the transmission, outer tub, and spin basket ***(Figure 6-2).***

The underside of the suspension housing provides mounting for the snubber pad and also houses the brake assembly ***(Figure 2-2).***

The bottom of the housing has been formed into a spherical configuration and, along with the snubber, rides on the domed area of the base which allows the housing to move freely in all directions.

The top of the suspension housing is attached to the lower bearing assembly with three mounting screws. These screws thread from the underside of the suspension housing dome into the die-cast bearing housing.

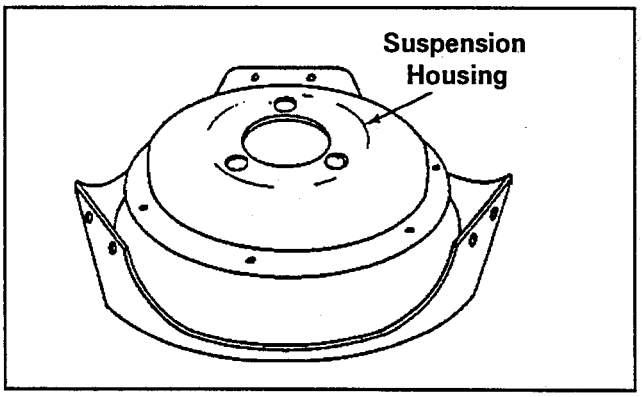

Figure 6-2

Service to the suspension housing, other than replacing it, is limited to replacing one of the other components that mount to the housing. The replacement procedures for these components are detailed in the ***Transmission Section*** of this manual.

REMOVAL

1. **Disconnect power to the unit.**

2. Remove the transmission assembly as detailed in ***Section 7.***

3. Remove the brake assembly as detailed in ***Section 7.***

4. Remove screws securing housing to the lower bearing assembly.

TUB BRACES

The tub braces are attached at the top to the tub support, and to the suspension housing at the bottom. The tub braces are located ***behind*** the tub support and suspension housing where large, thread forming screws are driven directly into the braces to secure them.

NOTE: ***Should a tub brace mounting screw hole become stripped, a nut can be installed on the thread forming screw.***

The extended end of the suspension spring fits through an extruded hole in the tub brace just below the mounting screws.

SUSPENSION SPRINGS

The suspension springs hold the entire wash unit in firm contact with the base. To reduce wear and prevent squeaks; grease has been applied to the friction points of the springs.

REMOVAL

The suspension springs can be removed and replaced by using the spring tool, part number **22002922** as follows:

1. **Disconnect power to the unit.**

2. Remove the front panel and rear access panel.

3. Pull or block the tub in the direction of the spring to be removed.

NOTE: ***Removing the tub top will allow the tub to travel further and extend the spring less.***

©1999 Maytag Appliances Sales Company

The new suspension spring tool, part number 22002922, is used to remove and replace the suspension springs on the Atlantis and the Performa washers, in addition to earlier models of brand washers.

<u>Adjustment Slots</u>: Use of the upper slot of the spring tool for the older Performa and brand washers is recommended. Using the lower slot on the Atlantis and the 1999 Performas washers will give the best results. Then proceed with steps as follows:

a). Hook the mouth of the tool under upper hook end of spring.

b). Insert blunt end of the tool into the recoil in the ball at the bottom of the spring.

c). Squeeze the handles together and unhook the spring hook from the brace.

4. Spring replacement is a reversal of the above.

NOTE: ***Be sure to grease the friction points of the replacement springs before installing.***

SPRING TOOL 22002922

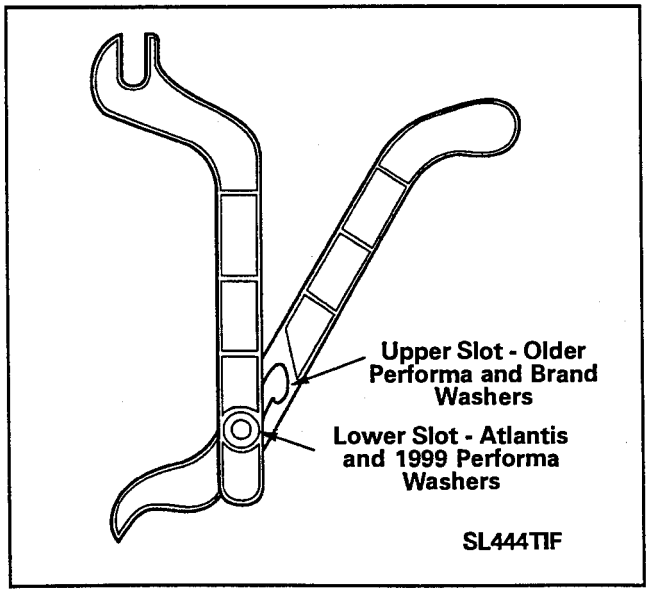

Figure 6-3

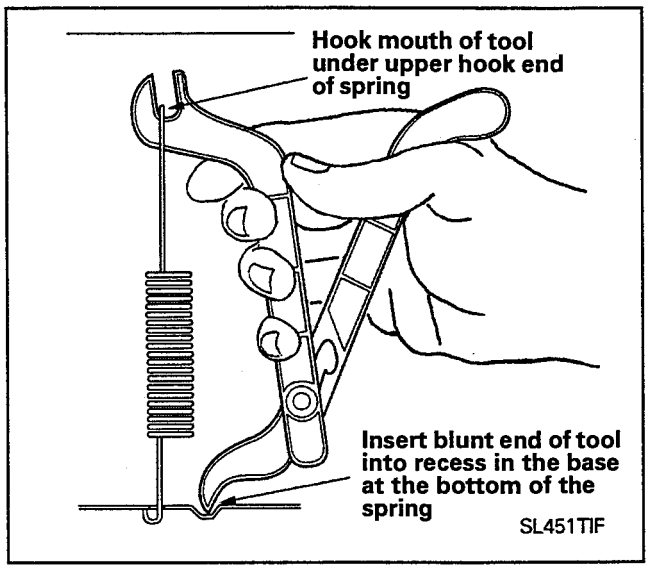

Figure 6-4

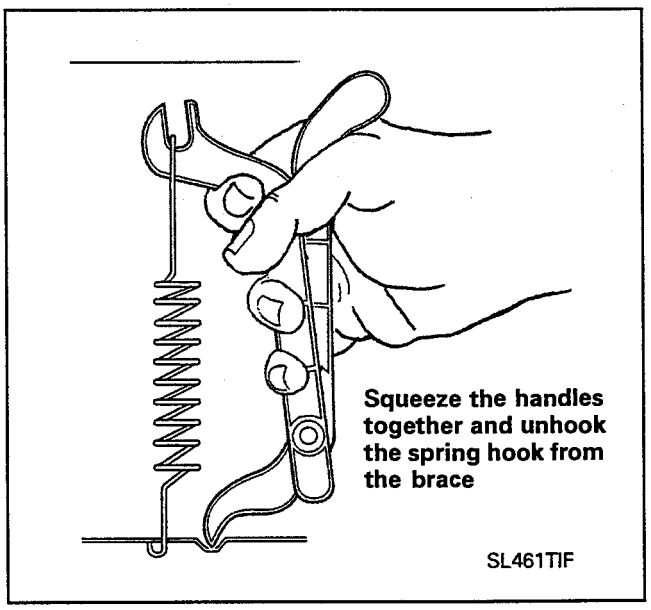

Figure 6-5

IMPORTANT

No attempt should be made to remove or install the springs with pliers, vise-grips or anything other than the spring tool, as damage to the springs could occur. When attaching the springs to the base for installation, make sure the spring end is protruding up, through the small triangular cut-out next to the deboss.

©1999 Maytag Appliances Sales Company

©1999 Maytag Appliances Sales Company

SECTION 7. TRANSMISSION AND RELATED COMPONENTS

Warning **- Always shut off electrical power to the washer before beginning any service repair procedures.**

This section will detail the servicing procedures on the transmission assembly which has splines formed on the agitator drive shaft.

An "O" ring is installed on the shaft just above the seal nut assembly to provide an air seal when the agitator is installed.

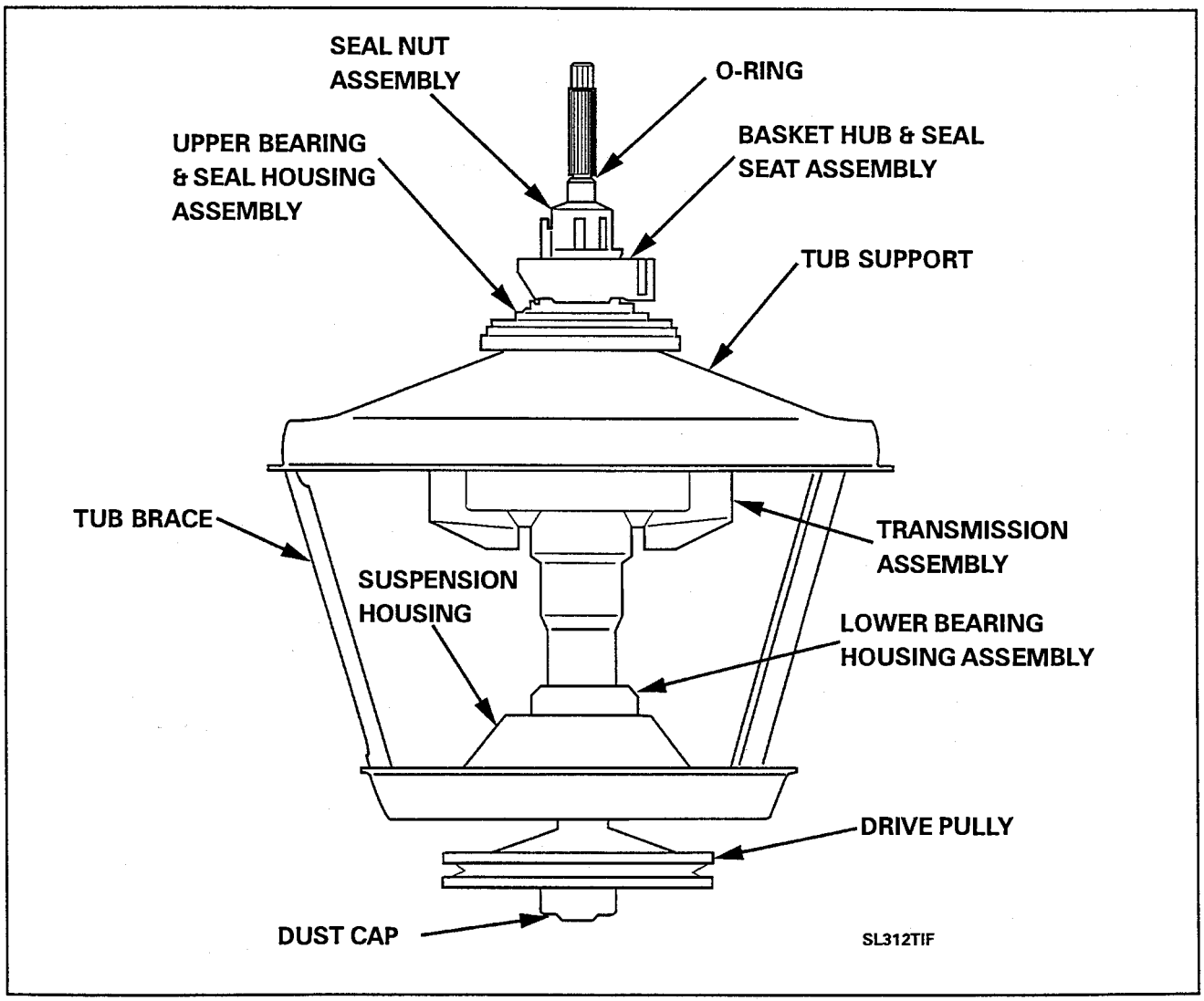

Figure 7-1

©1999 Maytag Appliances Sales Company

SEAL NUT ASSEMBLY

The seal nut assembly consists of a lip seal against the agitator shaft.

The seal nut assembly is threaded to the basket hub assembly. A small rubber gasket is installed in a groove on the bottom flange of the seal nut assembly. A foam gasket is placed between the bottom of the spin basket and the basket hub assembly.

The seal nut assembly can be removed after removing the spin basket, and the agitator shaft "O" ring.

REMOVAL

1. Lift the top cover.
2. Remove the tub cover.
3. Remove agitator.
4. Remove the Spin Basket.
5. Remove agitator shaft "O" ring.
6. Unthread the spin nut assembly from the basket hub assembly, by turning counter clockwise.

UPPER BEARING AND SEAL HOUSING

The glass filled copolymer bearing and seal housing assembly slips over a machined area on the upper drive tube. The basket hub assembly threads down over the drive tube and secures the bearing and seal housing together ***(Figure 7-2).***

The spin bearing and the tub seal are installed in a cavity in the center of the housing. The sheet metal tub support is attached to the under side of the housing with three (3) mounting screws. The spin bearing has been pressed into the underside of the housing cavity and is secured by the tub support. The center of the tub assembly mounts to the upper flange of the housing with a tub gasket and a tub seal installed between. The bottom of the tub sits on, and is attached to, the tub support.

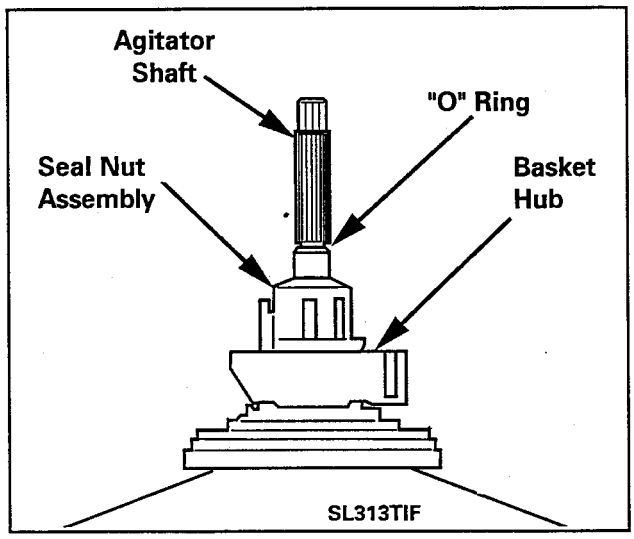

Figure 7-2

REMOVAL

1. **Disconnect power to the unit.**
2. Raise top cover and remove front panel.
3. Remove the agitator, spin basket, agitator "O" ring, spin nut and outer tub assembly.
4. Remove the basket hub assembly by turning it in a counterclockwise direction, using tool number **35-2968.**
5. Remove the suspension springs with the spring tool.
6. Unbolt the tub braces from the tub support.
7. Lift up on the bearing and seal housing with tub support attached.
8. To remove tub support, remove mounting screws from under the tub support.

©1999 Maytag Appliances Sales Company

TUB SEAL

The tub seal consists of the seal face and seal body.

NOTE: All parts of the seal must be replaced if either of the sealing surfaces is damaged.

The seal face fits into a recess in the underside of the basket hub assembly. Also, the seal body installs in the cavity on the top side of the bearing and seal housing. The spin bearing is located in a cavity on the underside of the bearing and seal housing.

Each of the two sealing parts, the seal face and the seal body, have sealing faces which are brought into contact with one another when the basket hub assembly is threaded down on the drive tube. The springs in the seal body exert pressure to keep the sealing faces in contact.

The tub seal fits into a recess on top of the upper bearing and seal assembly.

The carbon ring of the tub seal mates with the teflon ring underneath the spin basket hub.

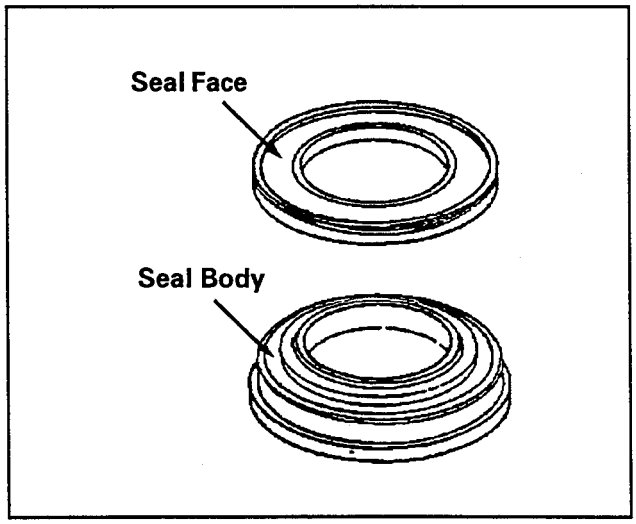

Figure 7-3

TUB SEAL REPLACEMENT

Should the tub seal begin to leak or develop excess seal drag, it must be replaced. The service replacement seal includes all the parts necessary to replace the entire seal. Be sure to replace all parts of the seal even if only one part is found to be damaged.

NOTE: ***If the tub seal is being replaced because it has begun to leak, the spin bearing is probably damaged as well and should be replaced. To replace the spin bearing, the bearing and seal housing must be removed as previously described. This also allows access to the tub seal for removal and replacement (refer to steps 2 and 3 below when installing).***

Removal and replacement of the tub seal can ONLY be accomplished as follows:

1. Follow steps 1 through 4 of the bearing and seal housing removal as previously described. The parts of the seal can now be removed from their mounting recesses.

2. Before installing the new seal, make sure both seal mating surfaces are free of foreign matter, then clean both surfaces with an alcohol saturated cloth.

NOTE: ***Make sure no grease comes in contact with the mating surfaces of the seal.***

NOTE: ***Do not use any agent other than alcohol to clean the mating surface. Do not use any lubricant other than water.***

©1999 Maytag Appliances Sales Company

UPPER SPIN BEARING

The spin bearing is installed in a cavity on the underside of the bearing and seal housing and is further secured in place by the inner diameter of the tub support.

SPIN BEARING REPLACEMENT

1. **Disconnect power to the unit.**
2. Remove the upper bearing and seal housing and the tub support as previously described.
3. Remove the seal body from the housing cavity.
4. Press the spin bearing out of the cavity from the opposite side of the housing.
5. When installing the replacement bearing into the housing cavity, be sure to **press against the outer race of the bearing to avoid damage to the bearing shield and causing premature failure**.

DRIVE PULLEY AND CAMS

The drive pulley and cam is located below the brake assembly on the drive shaft.

Models are equipped with a plastic drive pulley which has the upper cam molded onto the bottom of the hub. The purpose of the pulley and cam arrangement is to drive the clutch assembly during the agitate and spin cycle, and to disengage the brake assembly during the spin cycle.

The drive pulley slips over the drive shaft and rests against a series of washers, a thrust bearing, and a large washer type spacer. The spacer locates against the bottom of the brake rotor and lining assembly. ***(See the illustration on page 7-6.)***

The lower cam slips over the end of the drive shaft where splines formed in the cam engage with mating splines on the drive shaft end. This imparts a direct drive from the cam to the drive shaft. A shoulder molded on the bottom of the pulley hub engages "dogs" formed on the sides of the lower cam, and will drive it and the drive shaft in either direction.

A washer and retaining ring secure the pulley and cam on the drive shaft. A plastic dust cap snaps to the underside of the pulley to keep the cam surfaces clean.

OPERATION

When the drive pulley rotates ***CLOCKWISE,*** the upper and lower cams are designed to nest together which allows the drive pulley to remain in position on the drive shaft. The break remains engaged and the drive pulley will turn the lower cam and drive the shaft to cause the transmission ***to agitate***.

When the drive pulley rotates ***COUNTER-CLOCKWISE,*** the upper cam and pulley ride up the lower cam approximately 3/16 of an inch before the driving shoulders on the pulley hub engage the "dogs" on the lower cam.

This causes the top of the pulley hub to push against the spacer which compresses the brake spring and lifts the brake rotor and lining assembly off the brake stator. The brake is disengaged and the pulley will turn the lower cam and drive shaft to cause the transmission **to spin**.

©1999 Maytag Appliances Sales Company

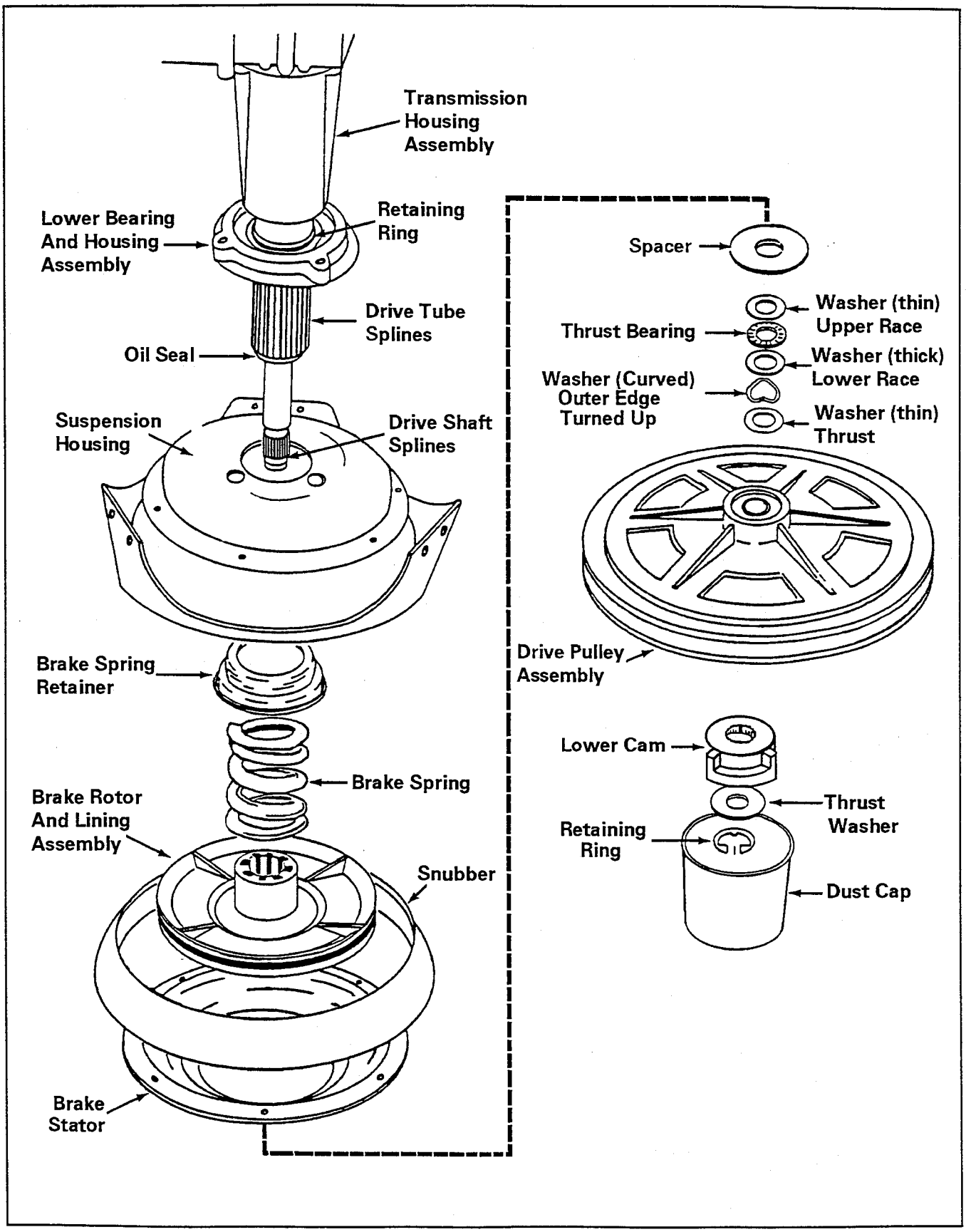

Figure 7-4

©1999 Maytag Appliances Sales Company

REMOVAL

1. **Disconnect power to the unit.**

2. Tip the unit over and remove the drive belt.

3. Remove the dust cap from the under side of pulley.

4. Remove retaining ring and washer from end of drive shaft.

5. Firmly pull lower cam off the drive shaft splines, then slide the other parts off the shaft. This will also allow access to the brake assembly for removal.

REPLACEMENT

After reassembling the components on the drive shaft, it will probably be necessary to pull down on the shaft to take the end play out of it before the thrust washer and retaining ring can be reinstalled.

NOTE: ***Each time the cams are reassembled on the drive shaft, the point in the cam rise where the brake disengages the stator should be checked and adjusted as necessary***.

Reference marks have been molded around the bottom outer edge of the lower cam as an aid in checking the point of brake disengagement *(Figure 7-5)*. Each mark, from right to left, represents approximately .010 of an inch cam rise.

To Check Brake Disengagement:

1. Manually rotate the drive pulley in a slow counterclockwise direction until the brake starts to release and the transmission begins to turn *(Figure 7-5)*.

2. Counting the reference marks on the lower cam from right to left, the pulley hub shoulder should be positioned between reference marks 9 and 4 with 6 being the median *(Figure 7-5)*.

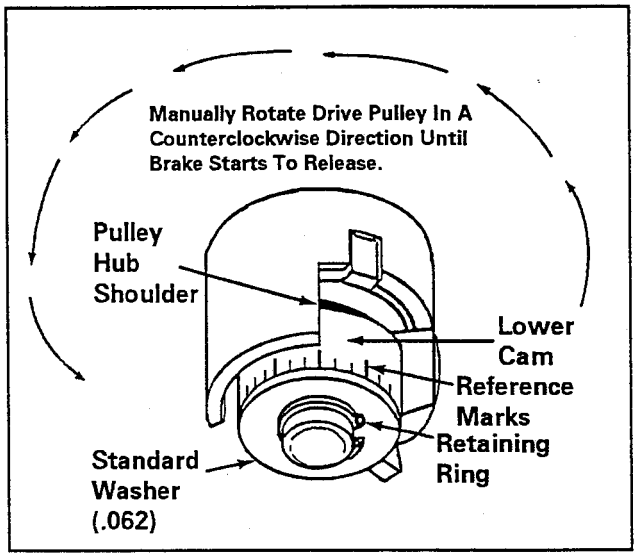

Figure 7-5

If the position of the pulley hub shoulder ***is not*** within these parameters and the brake has started disengaging, ***adjustment is required***.

To Adjust Brake Disengagement:

1. If the position of the pulley hub shoulder is ***less than 4 reference marks,*** remove the standard (.062 thickness) thrust washer and replace it with a thinner (.032 thickness) thrust washer (part number **35-2132**). Recheck disengagement.

2. If the position of the pulley hub shoulder is ***more than 9 reference marks,*** add a **35-2132** thrust washer (.032) to the standard thrust washer and recheck disengagement.

©1999 Maytag Appliances Sales Company

BRAKE AND SNUBBER ASSEMBLY

NOTE: ***This is a dry operating brake assembly.***

The brake assembly is located inside the domed area of the suspension housing and consists of the following components: brake spring retainer, brake spring, rotor and lining assembly and the brake stator.

The brake assembly, as well as the snubber, is held in position by the brake stator which is secured to the underside of the suspension housing by six mounting screws.

Spring pressure forces the rotor and lining assembly down on the brake stator and prevents the transmission from turning during agitation.

As stated previously, the drive pulley and cams provide a cam action which raises the drive pulley during the counterclockwise (spin) direction of the motor. When the drive pulley hub travels upward, it compresses the brake spring and moves the rotor and lining assembly up the drive tube disengaging it from the stator. The transmission is now free to spin.

Splines in the brake rotor hub mesh with splines on the drive tube end to provide positive vertical movement for the rotor and lining assembly. The splines are greased for ease of movement.

CAUTION

The brake assembly has a compressive spring force of approximately 200 pounds. See the following instructions for disassembly.

DISASSEMBLY

1. **Disconnect power to the unit.**
2. Remove the drive pulley and cam components as previously described.
3. Using brake removal tool number **LA-2004,** proceed as follows:
   - Pull out and remove "U" retainer from tool.
   - Slip the splined end of the drive shaft into hole located in the tool inner plunger.
   - Looking at the side of the tool, align slots on tool barrel and holes in tool plunger between splines and chamfered shoulder of shaft.
   - Slip "U" retainer through tool slots and holes capturing the drive shaft behind the chamfered shoulder.
   - ***NOTE: Be sure the "U" retainer is completely through both sides of tool.***
   - Tighten tool nut to compress brake spring ***until transmission turns freely.***
   - Remove six (6) screws which secure the brake stator and snubber to the underside of the suspension housing.
   - Loosen tool nut ***until the brake spring reaches its free length.***
   - Remove "U" retainer from tool and remove tool from drive shaft.
   - Remove brake components.

©1999 Maytag Appliances Sales Company

BRAKE REPLACEMENT

1. Apply silicone grease (part number **203959**) to the splines of the drive tube and rotor, if needed.

NOTE: ***This is a dry operating brake assembly. Make sure no oil or grease comes in contact with the mating surfaces of the brake lining and/or brake stator. Clean both surfaces with an alcohol saturated cloth before assembly.***

2. Compress the brake spring until the stator and snubber fit firmly against the suspension housing before affixing the mounting screws.

3. Follow the drive pulley and cam reassembly as detailed previously.

SNUBBER REPLACEMENT

1. Remove belt.

2. Lift top cover and remove front panel.

3. Remove tub to pump hose and air bell hose.

4. Remove six suspension springs.

5. Lift complete tub and drive assembly out of cabinet, then carefully place onto floor. Be careful not to damage the air bell nipple on the outer tub.

6. Remove pulley and brake assembly.

7. Remove snubber.

8. To reassemble; reverse above steps.

©1999 Maytag Appliances Sales Company

TRANSMISSION ASSEMBLY COMPLETE (Non-Repairable)

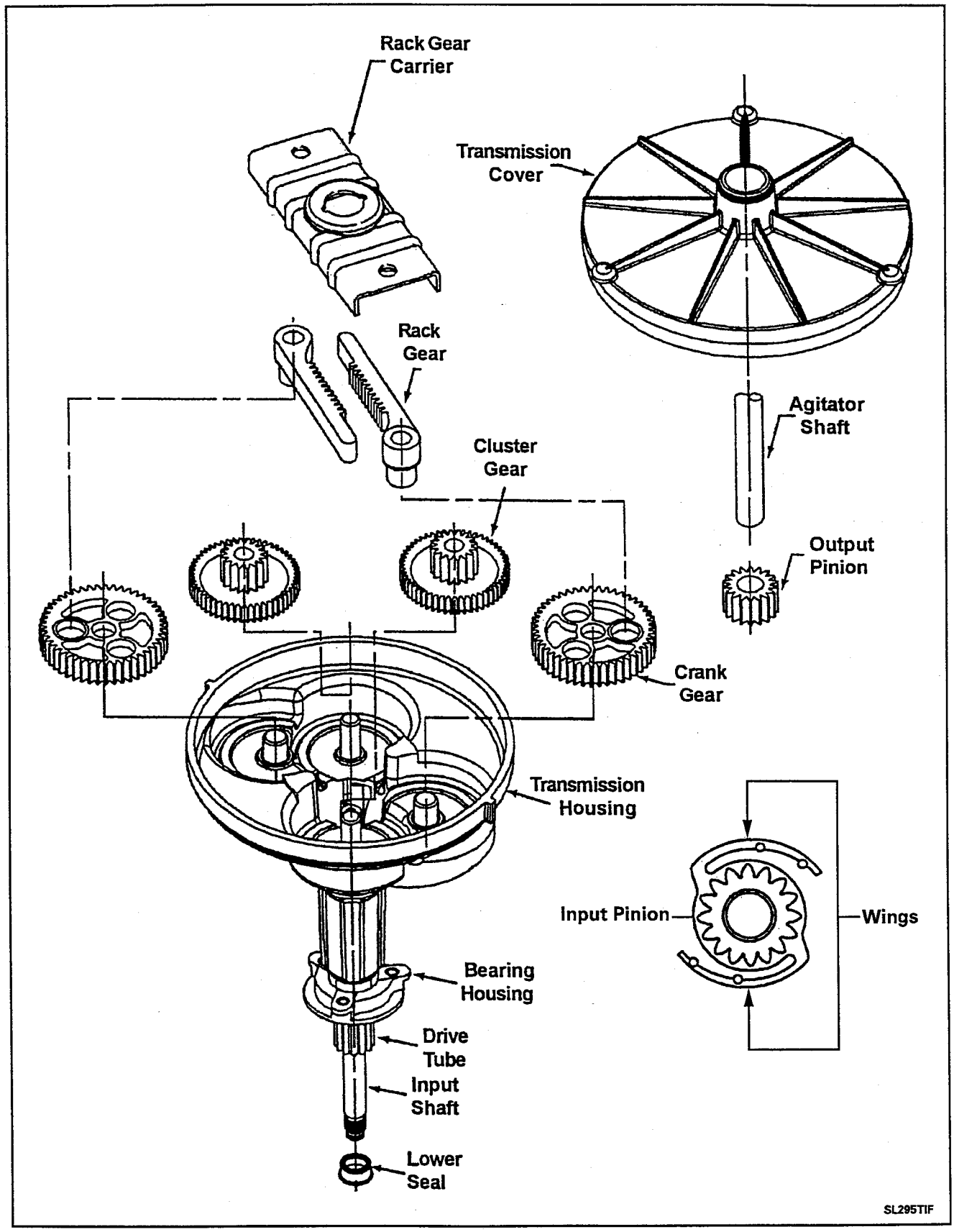

Figure 7-6

©1999 Maytag Appliances Sales Company

TRANSMISSION HOUSING ASSEMBLY

The die-cast aluminum transmission housing has four studs pressed into its upper region. The studs provide mounting for the two crank and two cluster gears. The top cover is threaded into the lower housing. A sealant is used on the threads as a gasket material. A steel drive tube with a splined end is pressed into the bottom of the transmission housing. A sleeve bearing is installed in the lower I. D. of the drive tube. Another bearing is pressed into the lower housing above the drive tube. These bearings provide a path for the drive shaft to ride in. An oil seal is installed in the bottom of the drive tube. The oil seal can be replaced as a separate part.

Oil Seal Replacement

The oil seal is located in the spline end of the drive tube. The seal can be replaced without removing or disassembling the transmission, as outlined below:

1. **Disconnect power to the unit.**

2. Remove the brake assembly to access the oil seal *(Figure 7-4)*.

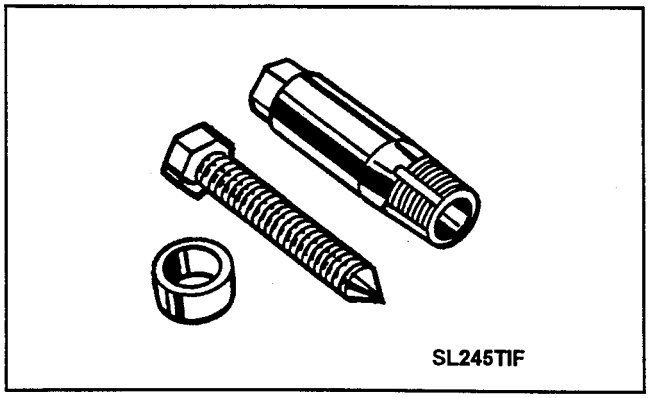

Figure 7-7

Seal Removal Tool, Part Number 2000021

3. Use tool part number **2000021.** Remove the old seal from the lower housing ***(Figure7-7a thru 7-7c).***

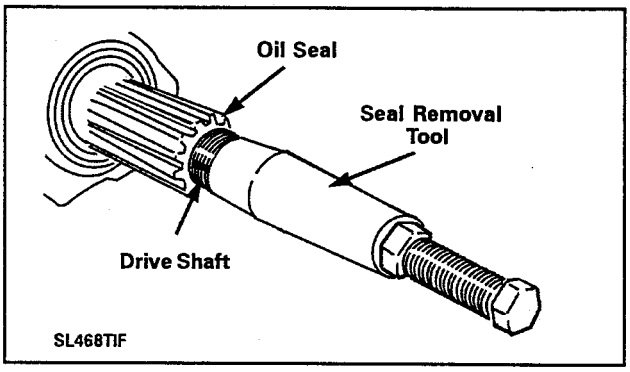

Figure 7-7a

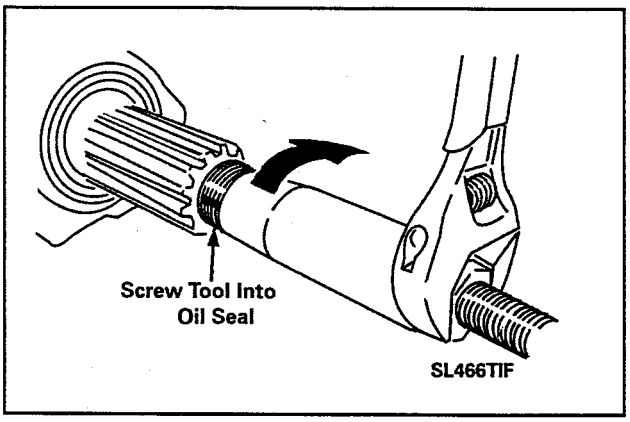

Figure 7-7b

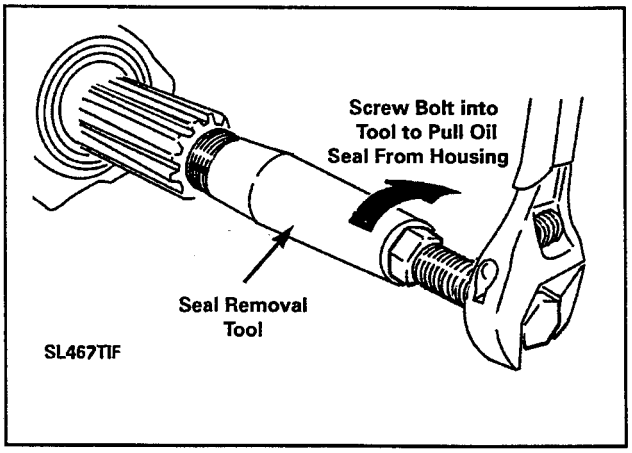

Figure 7-7c

©1999 Maytag Appliances Sales Company

4. Place the new seal over the seal protector.

5. Place the seal protector tool, by sliding the tool over the drive shaft and up to the seal cavity ***(Figure 7-7d)***.

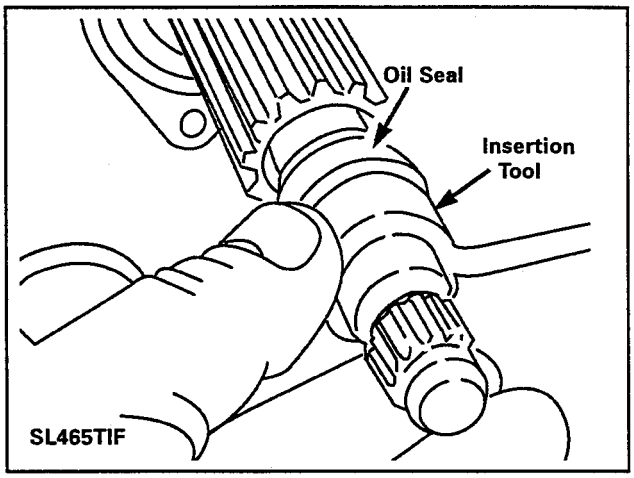

Figure 7-7d

6. Slide the transmission seal driver (tool number **2000021**) over the drive shaft until it makes contact with the drive washer. Use a hammer to "tap" the seal into the end of the drive tube ***(Figure 7-7e)***.

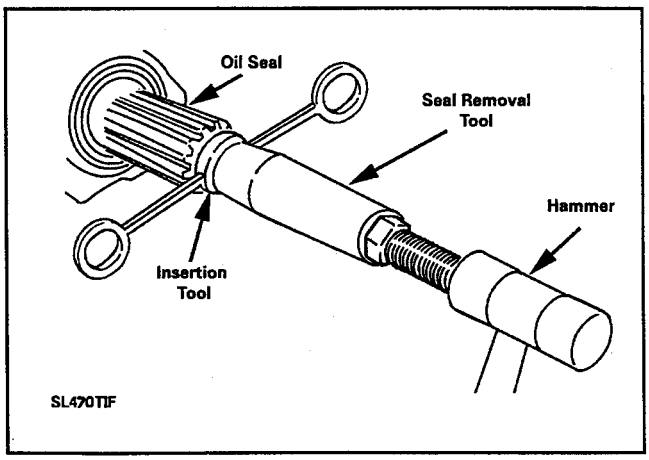

Figure 7-7e

7. Pull the rings with the insertion tool to remove, thus leaving the new oil seal on the drive shaft ***(Figure 7-7f)***.

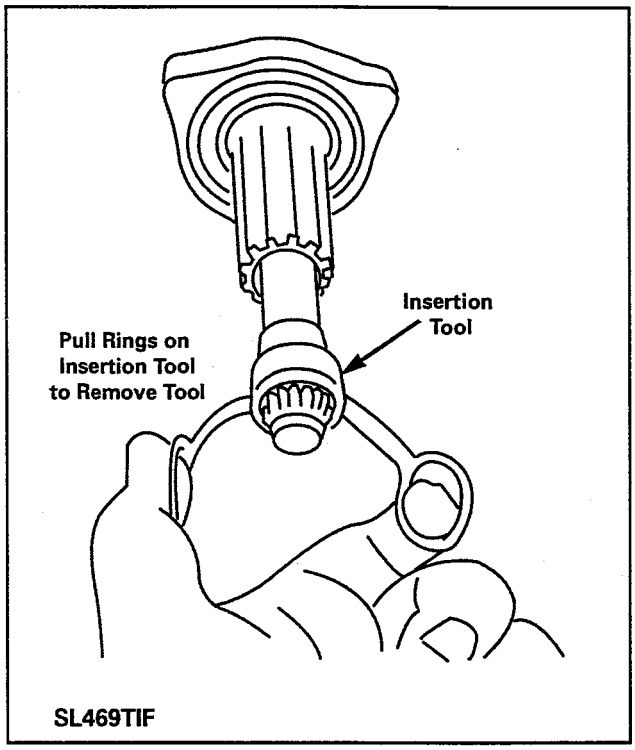

Figure 7-7f

LOWER BEARING ASSEMBLY

The lower bearing assembly provides lateral support for the drive tube and shaft against the tension of the drive belt. The top of the suspension housing is attached to the underside of the lower bearing assembly.

The lower bearing assembly consists of a ball type bearing which has been installed in an aluminum die-cast housing. The transmission assembly must be removed from the washer cabinet before the lower bearing assembly can be replaced.

©1999 Maytag Appliances Sales Company

REPLACEMENT

IMPORTANT

Because the lower bearing assembly has been pressed onto the drive tube under approximately 1,000 pounds of pressure, a puller must be used to remove it. However, the puller forcing screw must not be used on the end of the drive shaft or the clutch assembly could be damaged. Instead, a simple pipe and cap assembly can be made to slip over the drive shaft, with end clearance, and rest against the end of the drive tube.

The puller forcing screw is used on the end of the pipe cap which directs the forward thrust of the puller to the bottom of the drive tube.

REMOVAL

1. **Disconnect power to the unit.**

2. Remove the transmission from the washer cabinet.

3. Remove the cams, drive pulley, and brake assembly.

4. Remove the three (3) screws which secure the suspension housing to the lower bearing assembly.

5. Slip the pipe and cap assembly over the drive shaft and up against the drive tube.

6. Using a puller with at least a 3 1/2 inch spread and sufficient reach to encompass the pipe and cap assembly, remove the lower bearing assembly **(Figure 7-8)**.

NOTE: ***When installing the new lower bearing assembly, be sure to drive against the inner race only to avoid damaging the bearing shield which could cause premature failure.***

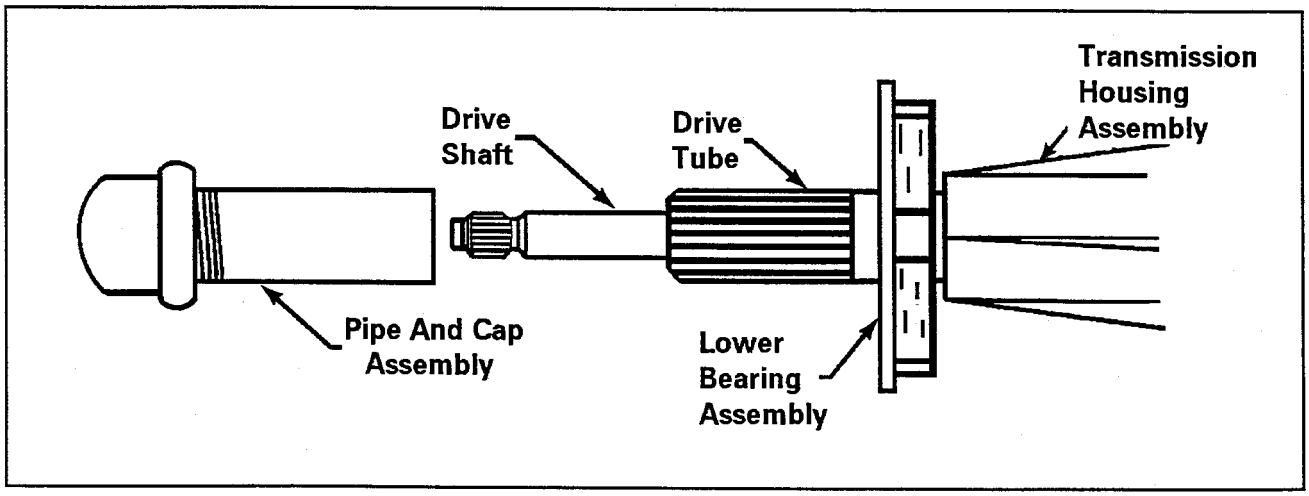

Figure 7-8

©1999 Maytag Appliances Sales Company

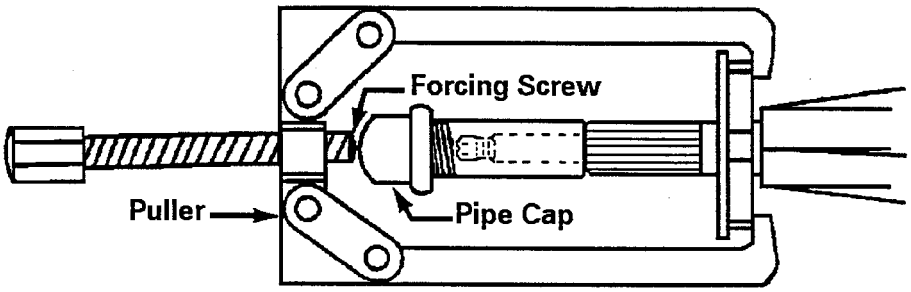

Figure 7-9

DIAGNOSING TRANSMISSION PROBLEMS

Listed below are most of the service complaints which would normally be caused by a malfunctioning component of the transmission assembly.

Oil Leaks

Oil leaks can be caused by faulty seals, gaskets, or a loose fitting stud.

Slow Spin Speed

Slow spin speed can be caused by a binding tub seal and/or bearing, brake rotor assembly not disengaging properly, a slipping clutch spring, or an off balance load. The test that follows can be used to isolate the problem.

TORQUE TESTING

A quick test of the efficiency of the spin operation components can be made by placing a 3 1/2 pound weight, such as a bag of sand, in the washer basket and starting the machine in the spin cycle. If the basket appears to reach full spin with the weight, the machine components are performing as intended. If the basket does not attain full spin speed, the torque test procedures as outlined in the following paragraphs should be performed to determine the problem.

The torque available to drive the spin basket is determined by the amount of drag or resistance presented by the tub seal and spin bearing, deducted from the input torque imparted to the transmission housing assembly by the clutch assembly.

The Following Torque Tests Will Allow a Problem in the Spin Drive Train to be Pinpointed:

NOTE: ***Before starting these tests, the washer should be operated in the agitation cycle with hot water for about two (2) minutes, and then for two (2) minutes in a spin cycle. This warms up the transmission oil and the spin drive train components.***

Available Torque

Place a 1/2 inch socket and torque wrench on the agitator retaining bolt.

Depress the safety spin switch to allow the washer to operate in the spin cycle, then while reading the torque allow the wrench to turn slowly (about 6 R.P.M.) through a complete 360 degree cycle. The reading should be between 18 and 25 inch pounds throughout the complete 360 degree rotation of the wrench.

©1999 Maytag Appliances Sales Company

If the torque readings are within these limits, the washer is performing properly and any slow spin complaints can be assumed to have been the result of off- balance loads.

If the torque reading exceeds 25 inch pounds, the input torque outlined later should be checked to determine the cause. Probable causes may be the drive shaft is binding in the transmission housing (drive tube) sleeve bearings, or that the clutch spring is binding on the drive shaft hub.

If the available torque reading is less than 20 pounds, follow the procedure for testing the drag torque.

Drag Torque

Position the washer so the drive pulley can be accessed, and remove the drive belt. While holding the transmission to keep it from turning, manually rotate the drive pulley counterclockwise ***until the brake stays disengaged***. Make certain the drive pulley hub shoulder has rotated fully against the cams in the spin driving position to ensure the complete disengagement of the brake. Release the transmission so it is free to turn.

Place a 1/2 inch socket and torque wrench on the agitator retaining bolt.

Slowly rotate the wrench 360 degrees at approximately 6 R.P.M. and read the torque. If the torque reading is over 4 inch pounds, remove the brake stator (as detailed earlier in this section) and recheck the drag torque.

If the torque reading is now under 4 inch pounds, the brake is binding and should be repaired.

If the reading is still over 4 inch pounds, the tub seal and/or spin bearing is binding and should be replaced.

If the ***available torque*** reading is below 18 inch pounds and the ***drag torque*** reading is not over 4 inch pounds, follow the procedure for checking the clutch assembly as to its input torque.

Input Torque

NOTE: ***It will be observed that the readings used to check the input torque are slightly lower than the readings used to check the available torque. The reason for this is when the brake is disengaged, as in checking the available torque, the compressed brake spring exerts a downward force on the bottom of the clutch hub and thrust washers. This keeps the clutch spring from slipping quite as readily as in checking the input torque where the brake is engaged and the downward force on the clutch hub is minimized.***

To check the input torque, remove the drive pulley and position the washer so the scale on the torque wrench can be read when it is placed on the input (drive) shaft. Attach the torque wrench adapter ***firmly*** to the shaft, place the wrench in the adapter and slowly rotate the wrench in a counterclockwise direction. A properly operating clutch assembly will have a torque reading between 18 and 22 inch pounds.

If the input torque is less than 18 inch pounds, the clutch assembly is damaged and the complete transmission must be replaced.

If the input torque exceeds 22 inch pounds, the drive shaft is binding in the sleeve bearings, and the complete transmission must be replaced.

©1999 Maytag Appliances Sales Company

TRANSMISSION REMOVAL

The transmission assembly can be removed from the washer cabinet after removing the drive belt, spin basket, outer tub and the suspension springs.

NOTE: ***If the "O" ring is to be reused, be extremely careful not to damage it during the removal.***

Remove the "O" ring and agitator once the drive train is back in place.

The transmission assembly, when removed as described, will have the related components assembled to it. These related components should be examined carefully before reinstalling.

To assist in correctly positioning the tub, a small indentation has been formed on the tub support just above one of the tub brace mounting areas. This is the left front tub brace.

When the tub is in proper position and ready to be mounted to the tub support, the large tub cover lock (on the side of the tub) should be located directly above the indentation and tub brace ***(See Page 7-16).***

IMPORTANT

When installing the transmission, it is necessary that the tub be located on the tub support a certain way if all the mounting holes are to be properly aligned. This should be done before attempting to mount the tub to the bearing and seal housing.

©1999 Maytag Appliances Sales Company

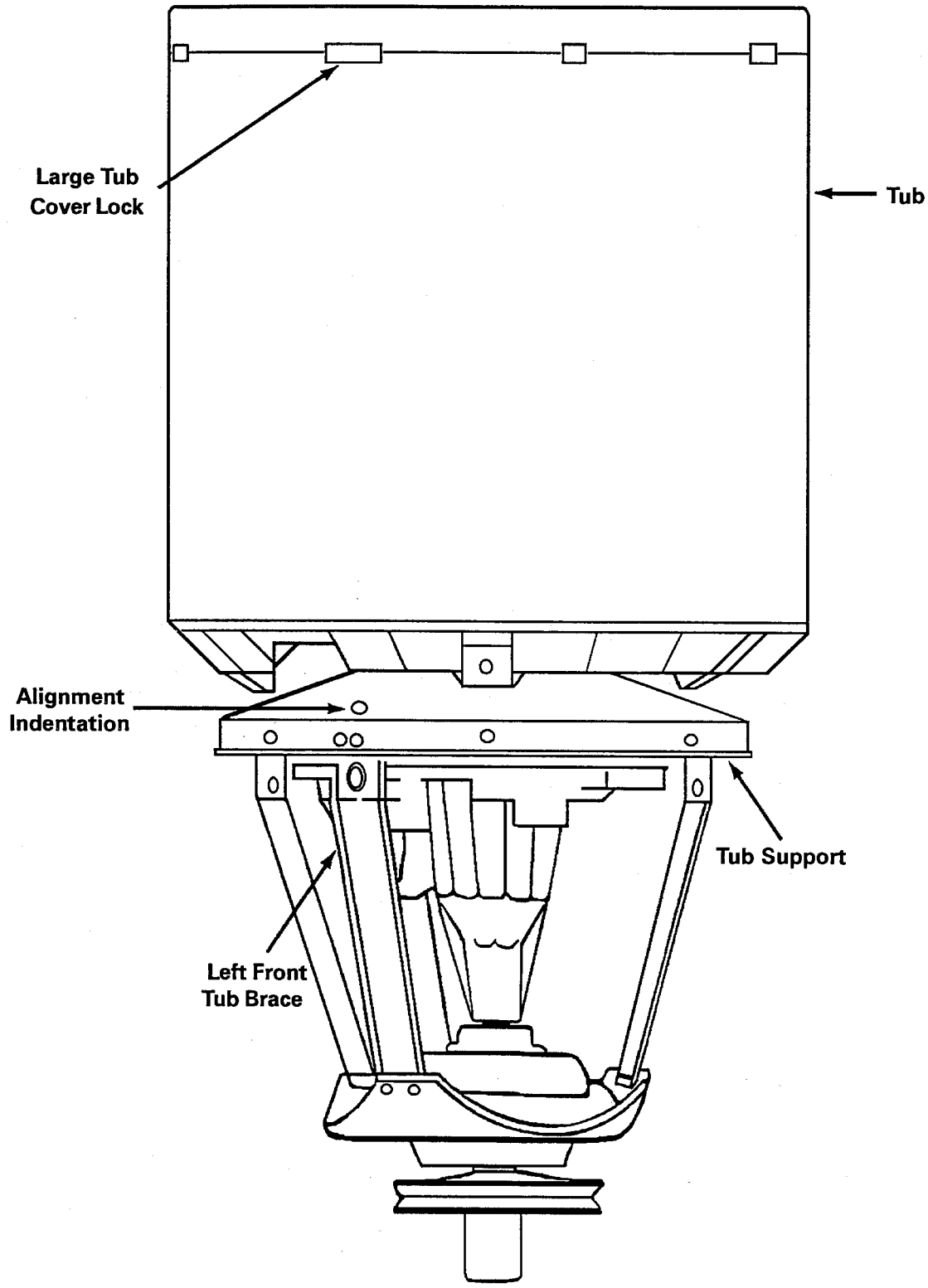

TUB TO TUB SUPPORT ALIGNMENT

Figure 7-10

©1999 Maytag Appliances Sales Company

SECTION 8. ELECTRICAL COMPONENTS & TESTING

ELECTRICAL TEST EQUIPMENT

The equipment required to service Maytag products depends largely upon the conditions you encounter. Locating a malfunction will often require the use of electrical testing equipment such as:

Description	Part Number
Analog Test Meter	20000005
Digital Test Meter	20001001
Clamp-on Ammeter	20000002
AC Voltage Sensor	20000081

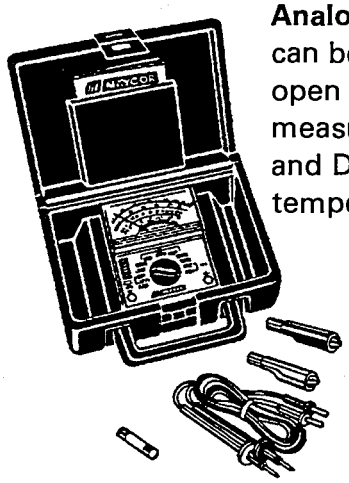

Analog Test Meter
can be used to check for open or closed circuits, measure resistance, AC and DC volts, and temperature.

Clamp-On Ammeter
can be used to detect shorts. Overloads on the circuit breaker or fuse can be traced to either the washer or circuit breaker by checking the washer current draw.

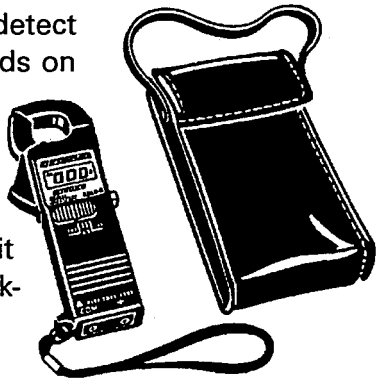

Digital Test Meter
can be used to check for open or closed circuits, measure resistance, AC and DC volts, and temperature.

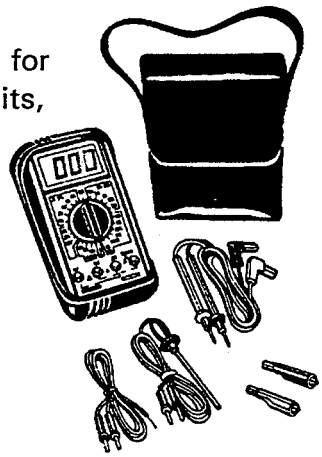

AC Voltage Sensor
can be used to alert you if AC voltage is present so proper safety precautions can be observed. The tip of the sensor will glow bright red if voltage is between 110-600 volts AC.

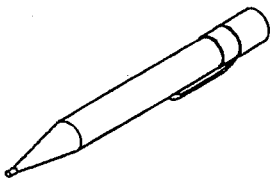

©1999 Maytag Appliances Sales Company

ELECTRICAL TESTS

***Warning* - Always shut off electrical power to the washer before beginning any service repair procedures.**

Grounded Components

When performing service diagnostics, replacements and repairs, always check to determine whether all ground wires linking panel and components are reattached if removed.

Voltage Checks

Generally, these checks will consist of taking readings at the wall receptacle to determine the availability of voltage to the product. Voltage checks on individual components of a product are not recommended due to the possibility of electrical shock. Component part testing is best accomplished through continuity checks with an Appliance Test Meter (***See Electrical Test Equipment***).

NOTE: ***Use of the meter on voltage higher than the indicated range may cause permanent damage to the meter. To prevent damage, first select the highest range and then lower the range for readings which fall within the lower scale.***

Set up meter for use as follows:

1. Turn selector knob to desired meter function and appropriate range.
2. Plug black lead into socket marked black (-).
3. Plug red lead into socket marked red (+).
4. Place test leads into receptacle to determine voltage available.

TIMER

The timer is mounted inside the control console assembly. The timer shaft protrudes through the control panel and provides for the selection of the various machine cycles available.

The timer is an incremental advance, rotary type driven by a synchronous motor. The timer controls and sequences the numerous steps and functions involved in each machine cycle. It accomplishes this by providing power to the various electrical components through the opening and/or closing action of timer contacts.

A typical timer and plug connector are illustrated in ***Figure 8-1***. The timer has all the connecting points brought out to miniature spade terminals. These terminals are centralized and aligned on one side of the timer to form a terminal board.

The connecting wires from the wiring harness are terminated in a compatible connector which plugs into the timer terminal board.

Since space is notably limited on the timer terminal board, terminal identification is provided by a sticker attached to the side of the timer. When referring to the sticker for terminal identification, the external timer motor wires can be used for orientation.

Another source for terminal identification is the schematic diagram which is supplied with each washer. The schematic diagram not only identifies the terminals, but also the plug connector terminals and their respective wire colors.

©1999 Maytag Appliances Sales Company

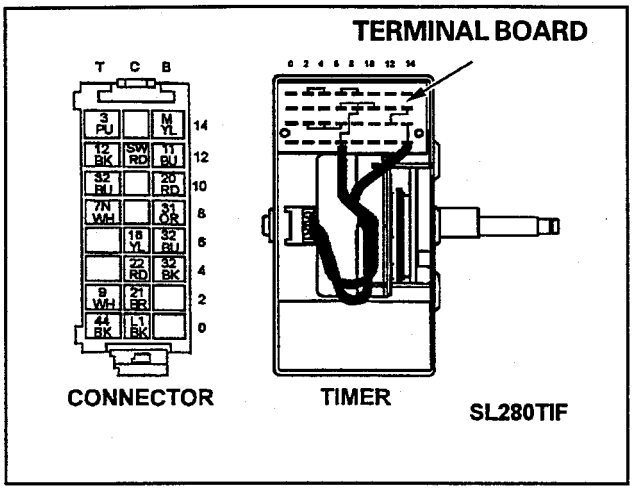

Figure 8-1

REMOVAL

Timer removal procedures are detailed in Section 4 under ***Control Panel Assembly Removal.***

Timer Testing

The timer can be tested by using an ohmmeter and the ***Timer Sequence Chart*** as detailed in the following.

TIMER SEQUENCE CHART

The following chart depicts a typical ***Timer Sequence Chart*** which can be found on the schematic diagram. It denotes the internal timer contacts which are opened and/or closed by the timer cam switches at any interval during a machine cycle.

Listed down the side of the chart at the left, each contact in the timer is identified as being controlled by a particular cam. The function of each contact and its terminal designation is also indicated.

Across the bottom of the chart are the various machine cycles available for selection, and the timer increments at which the cycle begins and ends. The increment, or degree division, indicates the travel of the timer through a cycle.

The heavy black lines to the right of the terminal column indicate a closed contact. If the contact is open, there is a break in the heavy black line.

EXAMPLE

Cam 0 shows the switch arm closed, making contact between Line 1 and wire 44 from increments 4 through 18. This circuit is the cam controlled ON/OFF switch in the timer and at increment 19 it opens, shutting the machine off (Figure 8-2).

Using the Time Sequence Chart

The sequence chart used in conjunction with an ohmmeter can be quite effective when attempting to verify or diagnose problems in the timer, wiring, or other electrical parts.

In order to establish exactly which electrical components should be operating during any given time throughout the various machine cycles, it is only necessary to determine what particular cycle and phase of the cycle you are interested in.

Once the cycle and phase have been ascertained, locate these along with the increment at the bottom of the ***Timer Sequence Chart***. When the cycle, phase and increment are located, follow the increment from the bottom to the top of the chart noting which timer contacts are involved in the area of concern.

Once the timer contacts have been determined, the electrical circuits involved can be traced on the connection diagram by increment or by phase, if necessary.

©1999 Maytag Appliances Sales Company

A point to point continuity check can be made to isolate the trouble either in the timer, wiring harness, or other electrical components after the circuit has been traced.

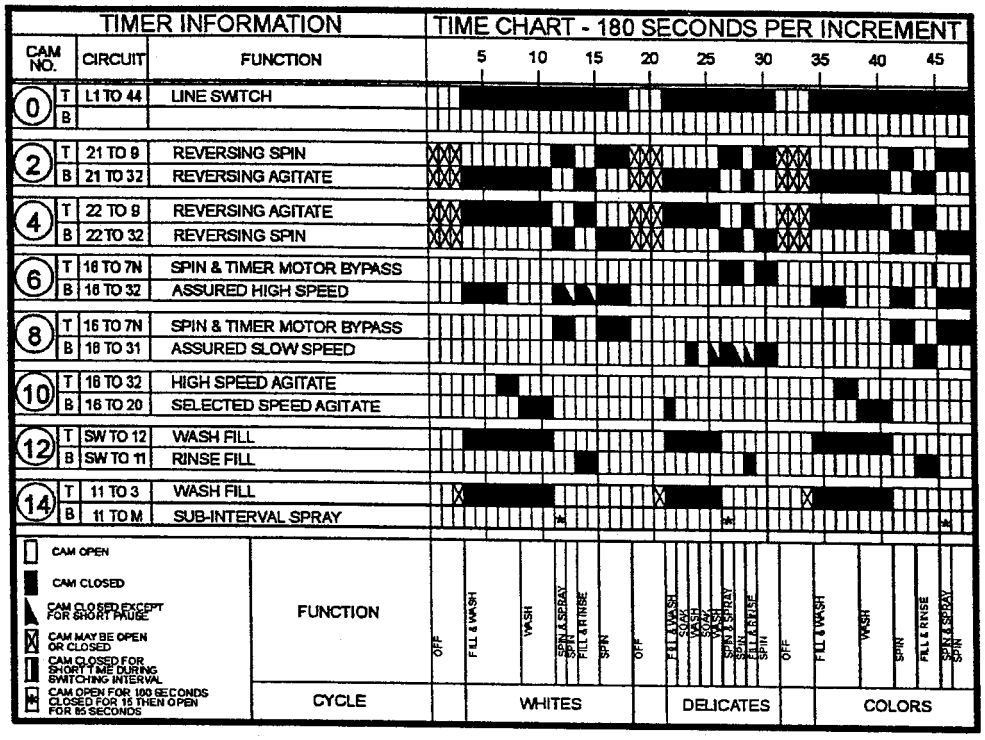

Figure 8-2

SL281TIF

AUTOMATIC TEMPERATURE CONTROL BOARD

The temperature control board receives information from the water temperature switch as to the user's water selections. The thermistor located in the water valve, provides inputs to the board, as to what temperature the incoming water is. This information combined with the selections on the temperature control switch determines the output signals to the water valve.

Temperature control boards are found on models MAV6000, MAV6057, MAV7000, MAV7057, MAV8000, MAV8057 and MAV8500 only. Two different types of boards are used on the washers. An analog temperature board is used on models MAV6000, MAV6057, MAV7000 and MAV7057. A microprocessor temperature control board is used on models MAV8000, MAV8057 and MAV8500.

The target cold temperature is a 75° F., plus or minus 5° F. Targeted Warm temperature is 95° F., plus or minus 5° F.

Keep in mind that the control system is intended to warm wash fills when necessary to the target temperature. It will not cool a fill when the inlet temperatures exceeds the minimum target temperatures.

Analog Temperature Control Board

The analog board, depending on the water temperature selected, will monitor the water temperature and will turn the valves **ON** and **OFF** to maintain proper water temperature. When the water temperature is set on **Warm,** both valves are on. The longer the valve is **ON**, the cold water temperature in the water lines eventually drops lower and lower.

©1999 Maytag Appliances Sales Company

When this occurs, the ATC will shut the cold water valve off for a brief period of time and turn it back on to maintain a proper temperature flow. Rinse fills are not temperature controlled unless Warm Rinse is selected. During activation, the indicator light is only ON when the board is controlling water temperatures.

The following chart ***(Figure 8-3)*** depicts the philosophy on how the Automatic Temperature Control Board operates. Note, the Thermistor Temp represents the temperature sensed by the thermistor in the water valve. The outputs are indicative of the board sending voltage to the water valve solenoids.

You will note in the following table, the only combinations where the temperature control board is active (BOLD) are Warm and Cold

with the temperature control selector in the ON position. When Cold is selected and the temperature sensed by the thermistor is too low at the valve, the Hot valve will be activated.

When Warm is selected and the temperature sensed by the thermistor is too cool, the Cold valve will be shut off.

Analog Automatic Temperature Control (ATC) Truth table:

Water Temp Selections	ATC Selector	Thermistor Temp	Hot Valve Output	Cold Valve Output	Indicator Light
Hot	Off	Low	On	Off	Off
Warm	Off	Low	On	On	Off
Cold	Off	Low	Off	On	Off
Hot	Off	High	On	Off	Off
Warm	Off	High	On	On	Off
Cold	Off	High	Off	On	Off
Hot	On	Low	On	Off	Off
Warm	On	Low	On	**Off**	On
Cold	On	Low	**On**	On	On
Hot	On	High	On	Off	Off
Warm	On	High	On	On	On
Cold	On	High	Off	On	On

Figure 8-3

Analog Temperature Board Tests

In order to test the board for proper function, we need to monitor incoming and outgoing signals to and from the temperature control board. The chart shown on the next page provides a listing of the eleven terminal pin connections ***(Figure 8-4)*** of the board, their source or function, and identifies outputs/inputs ***(Figure 8-5).***

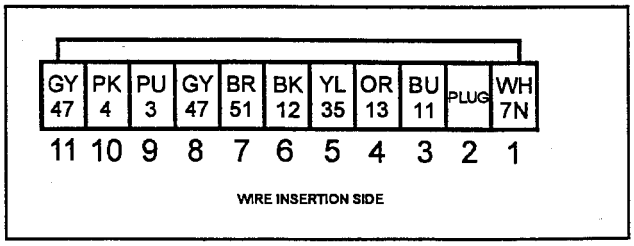

SL282TIF

Figure 8-4

©1999 Maytag Appliances Sales Company

ANALOG TEMPERATURE CONTROL BOARD DIAGNOSTICS FOR MAV6000, MAV6057, MAV7000 and MAV7057

PIN	SOURCE	OUTPUT/ INPUT	WIRE COLOR	MEASURE TO PIN #	VOLTS OHMS	CONDITIONS
1	Neutral	Input	WH	Line	120VAC	
2	Not Used					
3	Cold Valve	Output	BU	1	120VAC	
4	Hot Valve	Output	OR	1	120VAC	
5	Indicator Light	Output	YL	1	120VAC	TC Option Selected Warm or Cold Wash Selected
6	Timer (12 T Contact)	Input	BK	1	120VAC	Wash Cycle on Timer
7	TC Disable	Input	BR	6 *	OVDC 3-24VDC	TC Option Deselected TC Option Selected
8	Thermistor	Input	GY	11	10K-100K OHMS	Room Temperature
9	Temp Selector Switch Cold Wash	Input	PU	6 * **	OVDC	Warm or Cold Wash Selected
10	Temp Selector Switch Hot Wash	Input	PK	6 * **	OVDC	Hot or Warm Wash Selected
11	Thermistor	Input	GY	8	10K-100K OHMS	Room Temperature

Figure 8-5

*** Reference DC Voltages to Line 1.**

*** * Temperature only occurs during Cold or Warm wash fills.**

MICROPROCESSOR TEMPERATURE CONTROL BOARD

The microprocessor temperature control board has the temperature control features of the analog board, with the additional functions of finger tip faucet, rinse fills, spray rinses and end of cycle signal. On Model MAV8500 only, the ATC temperature control can blend the proper selected water temperatures during the initial water fill. To activate this feature, the Temperature Control option must be activated. The first fill at the initial start-up of the washer will have a blended water temperature fill. All fills after this will not be temperature controlled through the ATC. Meaning the Temperature fill will be what is selected on the temperature selection switch.

Finger Tip Faucet

The faucet is controlled through a rocker switch on the control console. The fill circuit is fed through the temperature control board then to the water valve. As long as the pressure switch is not satisfied, the finger tip

©1999 Maytag Appliances Sales Company

faucet option will function. When the pressure switch is satisfied, the faucet will no longer function.

End of Cycle Signal

The signal will sound at the end of the final rinse. Note, the signal will not sound for 150 seconds into the cam closure. Software built into the board enables the board to perform this function. The washer will continue to spin for 15-20 seconds at the end of the signal. On Model MAV8500 only, the reminder chime will sound repetitively every four minutes. This will continue until the timer knob is depressed, the reminder chime option switch is deselected or the water fill level is increased.

Signal intensity is controlled by the user using a rocker switch on the control console. The rocker switch can be checked at the temperature control board terminal connector ***(Figure 8-6)*** using the following chart, along with other machine functions ***(Figure 8-7)***.

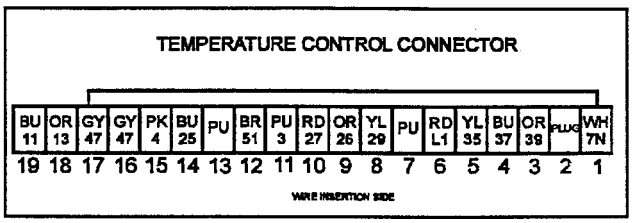

Figure 8-6

©1999 Maytag Appliances Sales Company

MICROPROCESSOR TEMPERATURE CONTROL BOARD DIAGNOSTICS
MAV8000 & MAV8057

PIN	SOURCE	OUTPUT/ INPUT	WIRE COLOR	MEASURE TO PIN #	VOLTS OHMS	CONDITIONS
1	Neutral	Input	WH	Line	120VAC	
2	Not Used					
3	Water Valve - Hot	Output	OR	1	120VAC	
4	Cold Valve	Output	BU	1	120VAC	
5	Indicator Light	Output	YL	1	120VAC	ATC Option Selected Warm or Cold Wash
6	Line 1	Input	RD	1	120VAC	
7	Fingertip Faucet	Input	RD PU	6	OVDC 12-24-24VDC	FF Button Not Pushed FF Button Pushed
8	Timer Input (Chime)	Input	YL	6	12-24VDC 5VDC	Contact 9T or 9B Closed Contact 9T or 9B Opened
9	Chime Soft	Input	OR	6	12-24 VDC	Soft Chime Selected
10	Chime Loud	Input	RD	6	12-24VDC	Loud Chime Selected
11	Temp Selector Switch - Cold Wash	Input	PU	6	OVDC	Warm or Cold Wash Selected
					12-24VDC	Warm or Cold Wash Deselected
12	Temp Control Enable	Input	BR	6	OVDC 12-24VDC	Option Deselected Option Selected
13	Fingertip Faucet	Output	PU	6	24VDC	
14	Chime Switch	Output	BU	6	24VDC	
15	Temp Selector Switch - Hot Wash	Input	PK	6	OVDC	Hot or Warm Wash Selected
					12-24VDC	Hot or Warm Wash Deselected
16	Thermistor	Input	GY	17	10K-100K OHMS	
17	Thermistor	Input	GY	16	10K-100K OHMS	
18	Temp Selector Switch - Warm Risnse	Input	OR	6	OVDC	Warm Rinse Selected
					12-24VDC	Warn Rinse Deselected
19	Cold Rinse	Input	BU	6	OVDC	Cold/Warm Rinse Selected in Rinse Fill
					12-24-VDC	Cold/Warm Rinse Deselected in Rinse Fill

Figure 8-7

©1999 Maytag Appliances Sales Company

MICROPROCESSOR TEMPERATURE CONTROL BOARD DIAGNOSTICS FOR MODEL MAV8500

PIN	SOURCE	OUTPUT/ INPUT	WIRE COLOR	MEASURE TO PIN #	VOLTS OHMS	CONDITIONS
1	Neutral	Input	WH	Line	120VAC	
2	Not Used					
3	Water Valve - Hot	Output	OR	1	120VAC	
4	Cold Valve	Output	RD	1	120VAC	
5	Indicator Light	Output	YL	1	120VAC	ATC Option Selected Warm or Cold Wash
6	Line 1	Input	BU	1	120VAC	
7	Fingertip Faucet	Input	PU	6	OVDC 12-24VDC	FF Button Not Pushed FF Button Pushed
8	Timer Input (Chime)	Input	YL	6	OVDC 5VDC	Contact 9T or 9B Closed Contact 9T or 9B Opened
9	Chime Soft	Input	OR	6	12-24VDC	Soft Chime Selected
10	Chime Loud	Input	RD	6	12-24VDC	Loud Chime Selected
11	Temp Selector Switch - Cold Wash	Input	BU	6	OVDC	Warm or Cold Wash Selected
					5VDC	Warm or Cold Wash Deselected
12	Temp Control Enable	Input	BR	6	OVDC 12-24VDC	Option Deselected Option Selected
13	Fingertip Faucet	Output	PU	6	24VDC	
14	Chime Switch	Output	BU	6	24VDC	
15	Temp Selector Switch - Hot Wash	Input	OR	6	OVDC	Hot or Warm Wash Selected
					5VDC	Hot or Warm Wash Deselected
16	Thermistor	Input	GY	17	10K-100K OHMS	
17	Thermistor	Input	GY	16	10K-100K OHMS	
18	Line 1	Input	PU	1	120VAC	Signature Circuit to tell Board this is for a MAV8500
19	Open					

Figure 8-7A

©1999 Maytag Appliances Sales Company

TIMER LINE SWITCH INPUT

The finger tip faucet is the only control board function that will operate with the timer knob pushed in. This is monitored through cam 0 of the timer. Line voltage is routed through the timer and when the timer knob is pulled out, cam 0 closes and routes line voltage to a 1/4" spade terminal labeled Timer Sense on the temperature control board.

TEMPERATURE CONTROL BOARD TEST PROCEDURE(MAV8000, MAV8057 & MAV8500)

This procedure exercises all circuit board inputs and outputs such as thermistor, temperature signal light and audible signal. The only exception is the connection to the "WHEN TO CHIME" cam of the timer.

1. Turn Temperature Control OFF. Check fill in both wash and rinse at each of the various temperature settings for proper operation. ***This checks outputs of the temperature option switch and the water valve solenoids.*** If all are OK, proceed to step 2. **Note:** ***If a mistake is made in executing the following sequence, it may be repeated at any time by returning to step 2.***

2. Confirm that the Temperature Control Switch is **OFF**, End-of-Cycle Signal Switch is **OFF**. **Note:** ***The timer can be set to any position.***

   (Steps 3 through 9 must be accomplished within 20 seconds from start to finish.)

3. Press and release the FINGER FAUCET switch. (Water will flow for 7 seconds until step 9 is complete, presuming the pressure switch is not satisfied.)

4. Switch TEMPERATURE CONTROL **ON.**

5. Switch SIGNAL LOUD SWITCH **ON.**

6. Switch TEMPERATURE CONTROL **OFF.**

7. Switch SIGNAL LOUD SWITCH **OFF.**

8. Switch TEMPERATURE CONTROL **ON.**

9. Switch SIGNAL LOUD SWITCH **ON.**

10. End-of-Cycle Signal will sound and the Temperature Control Indicator Lamp will light and remain on for 20 seconds. (Should the Indicator light blink at a fast rate of 0.2 seconds on, 0.2 seconds off, this is an indication that the water valve thermistor is either open or shorted.)

WATER VALVE

The water valve is secured to a bracket inside the left rear cabinet area by two (2) mounting screws. The bracket may be removed for service.

The water valve has two solenoids, one on the "***HOT***" water side and another on the "***COLD***" water side. These solenoids are energized through the timer, temperature control board (MAV6000, MAV6057, MAV7000, MAV7057, MAV8000, MAV8057 and MAV8500) and water temperature selector switch and will allow ***COLD***, ***HOT*** or ***WARM*** (a mixture of ***HOT*** and ***COLD***) water to enter the tub as directed.

Testing Water Valve

The water valve can be accessed by raising the top. The valve can be tested using an ohmmeter and performing the following:

1. **Disconnect power to the unit.**

2. Remove all wiring from the solenoid(s) being tested.

3. Place the test leads across the terminals of the solenoid being tested. The meter should indicate continuity.

©1999 Maytag Appliances Sales Company

NOTE: ***Normal resistance of each coil is approximately 500-1000 ohms.***

4. Place one test lead on one terminal of the solenoid being tested, and place the other lead on a suitable ground. The meter **should not** indicate continuity.

Thermistor Check

The thermistor in the water valve changes in resistance in direct relationship to water temperatures. The Thermistor is a NTC (Negative Coefficient Thermistor) type. As the temperature rises the resistance value will decrease. When the temperature drops, the resistance value will increase

1. Run a partial hot water fill and check the ohm resistance of the thermistor circuit. To check the ohm resistance, pull the temperature control wire harness connector off the temperature control board and locate the number 16 and 17 sockets in the connector ***(Figure 8-8)***.

2. Run a cold water fill and measure the resistance again. There should be a notable difference in the resistance readings.

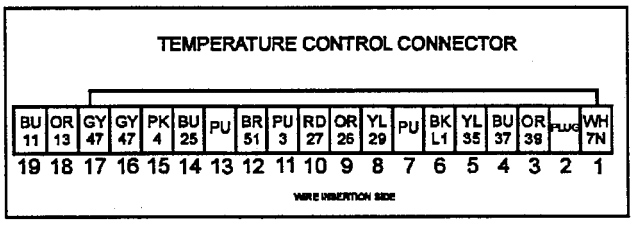

Figure 8-8

MOTOR

All washers are equipped with split phase reversible motors ***(Figure 8-9)***. The motor is 1/2 H.P., two speed. The motors have a four (4) pole and a six (6) pole winding and run at 1725 R.P.M. or 1149 R.P.M. respectively.

Each motor has an internal thermal overload protector which opens when exposed to excessive amperage draw. The overload protector is wired in series with line voltage to the motor. When the switch opens, the motor will shut down. Although the thermal overload protector switch will reset, it is not field serviceable.

MOTOR SWITCH

The externally mounted motor switch is a mechanically operated device used to control the power input when the motor starts.

The motor switch has two sets of contacts which operate simultaneously. One set controls the start winding circuit. The second set feeds the normal speed circuit, and then switches the circuit to the slow speed winding.

On two speed motors it is necessary that the 4 pole winding, the normal speed winding, be in the circuit each time the motor starts even if the speed selector control is set for slow speed operation.

When the motor reaches switching speed, the switches move opening the circuit to the start winding and at the same time transferring the power from the normal speed winding to the slow speed winding.

©1999 Maytag Appliances Sales Company

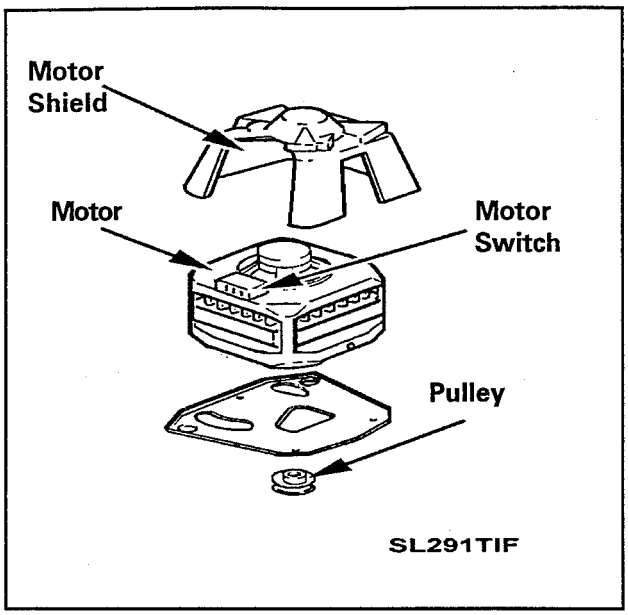

Figure 8-9

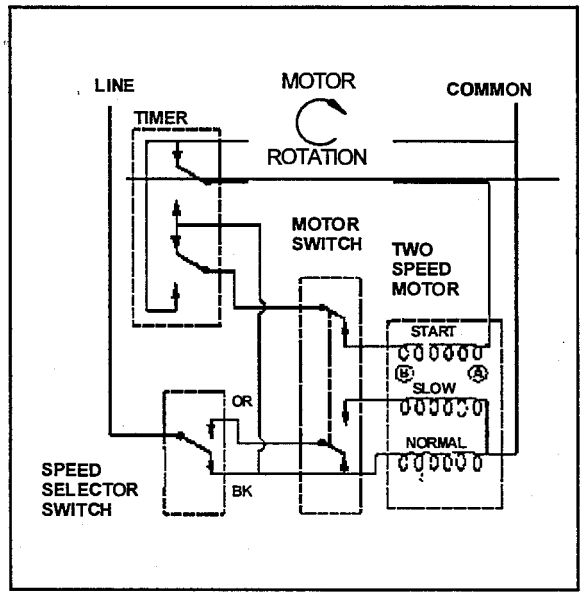

Figure 8-10

Motor and Switch Operation

The polarity of the magnetic field of the start winding, in relation to the magnetic field of the run winding, determines the direction of the rotation of the motor.

The timer is used to reverse the polarity of the start winding field.

Side A of the start winding is connected to the common side, B is connected to the line through the motor switch. The speed selector switch is set for normal speed operation ***(Figure 8-10)***.

As the motor starts running, the motor switch moves opening the start winding circuit. The motor is running on the normal speed winding in the direction indicated ***(Figure 8-11)***.

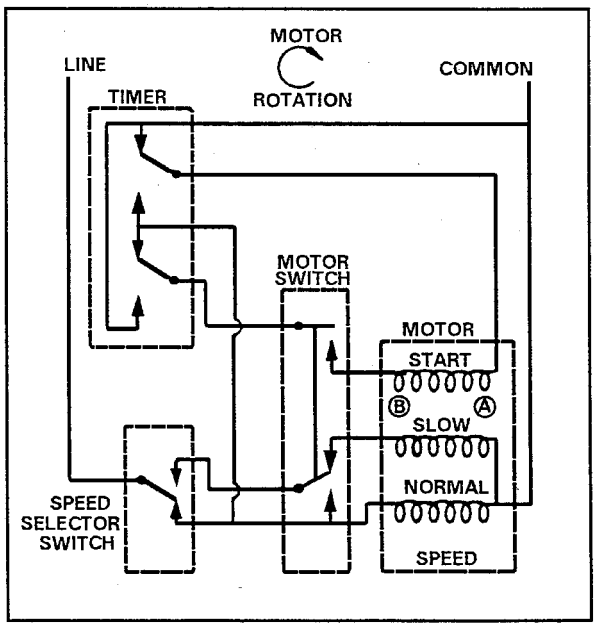

Figure 8-11

The timer selection has been changed, now side A of the start winding is connected to the line; side B is connected to the common side through the motor switch. The speed selector switch is set for slow speed operation.

©1999 Maytag Appliances Sales Company

The motor switch is supplying power to the normal speed motor winding ***(Figure 8-12)***.

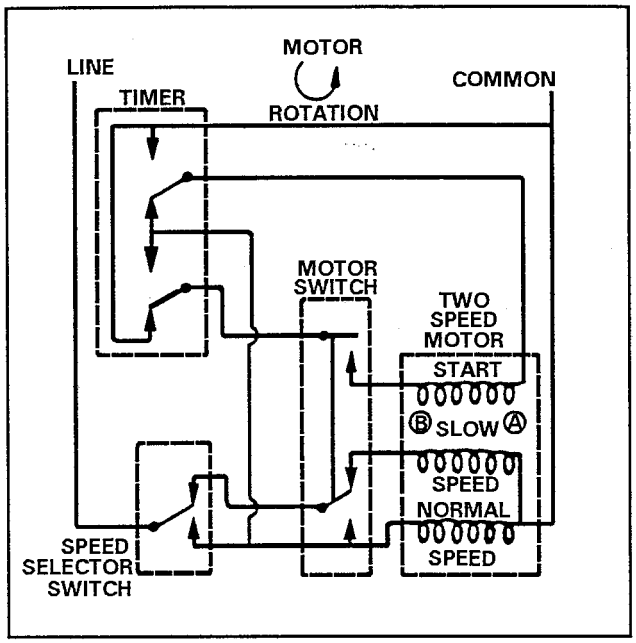

Figure 8-12

As the motor starts running, the motor switch moves opening the start winding and transferring the power from the normal speed winding to the slow speed winding. ***The motor is running on the slow speed winding in the direction indicated.***

MOTOR CIRCUIT TESTING

The motor overload protector, motor starting switch and the motor are the three components that should be tested if the motor assembly is suspected of being the cause of a service problem. The power cord should be unplugged and all wiring connections from the machine wiring harness to the motor starting switch should be disconnected before any testing is done to the motor.

Overload Protector

The overload protector is built into the motor and is not serviceable. The contacts of the overload protector are normally closed and open in response an excessive amperage draw. The contacts reset automatically when they cool off. If the contacts open, all power to the motor is cut off.

If the overload protector opens repeatedly, check the following:

1. A binding condition in the motor or in the drive train.
2. Poor electrical connections causing a low voltage situation.
3. The motor overheats because of a restricted air flow. (The motor can get as hot as 200 degrees Fahrenheit and still be operating within design specifications.)

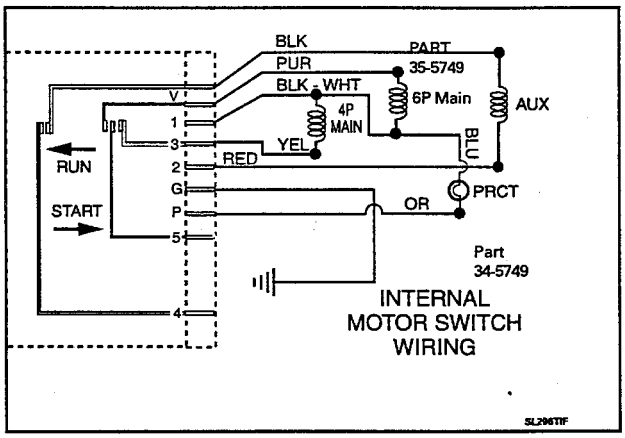

Figure 8-13

Circuit	Wires Involved	Switch Terminals	OHMS
Start Winding	RD-BK	2 - *	3.1
Slow Winding	YL-Bk/WH	1 - 3	2 .3
Normal Winding	BK/WH-PU	1 - V	1.3
Thermal Protector	BK/WH - OR	1 - P	0

Motor Switch & Thermal Protector Checks

Remove the wire harness connector from the motor and use an Ohmmeter to check the motor terminals listed below ***(See Figure 8-13)***.

©1999 Maytag Appliances Sales Company

Motor

If the motor runs in one direction but will not reverse, the problem is in the timer or wiring harness, not in the motor. The same motor components are used when the motor runs in either direction; the only change is in the electrical circuitry feeding the start winding which is controlled by the timer and related wires.

A two conductor test cord which has two female spade connector terminals on each conductor is needed to test the motor operations (tool number **038183**).

To test a motor, connect the two spade connectors on one side of the cord to terminals 1 and 4 on the starting switch and the two connectors on the other side of the cord to the starting switch terminals 2 and 3.

To check the slow speed operation, change the lead on terminal 3 to terminal 5. Be sure to test the motor in its normal vertical position. If the motor will not start, or if it starts but does not attain normal speed, check the operation of the external motor switch, replace the motor.

NOTE: ***Normal resistance of the motor windings should be:***

NORMAL SPEED	1.3 OHMS
SLOW SPEED	2.3 OHMS
START	3.1 OHMS

MOTOR MOUNTING

The motor mount system consists of a motor and mounting plate assembly as shown in ***(Figure 8-14).***

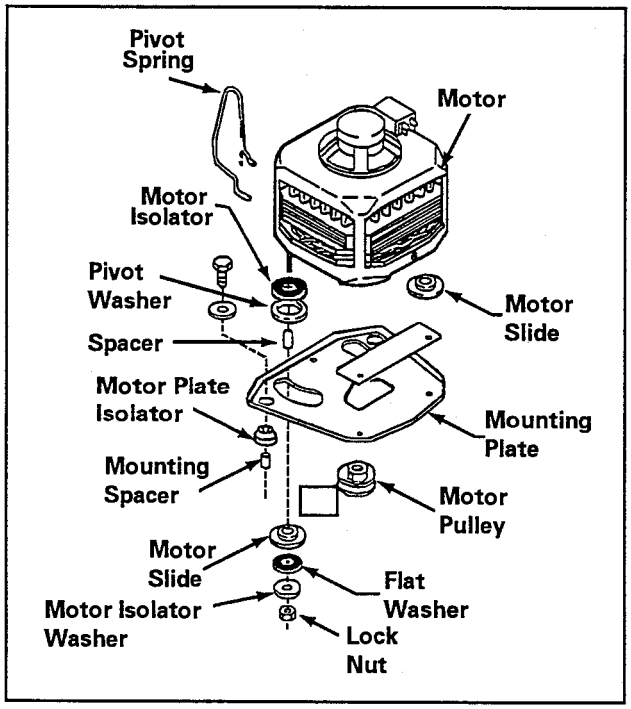

Figure 8-14

Assembled to the motor studs and secured by locknuts are rubber isolators and washers which sandwich nylon washers and slides through slots in the mounting plate. A nylon slide is attached to the motor bottom, and a pivot spring installs between the motor and mounting plate.

In operation, the nylon washers and slides ride in the slots in the mounting plate, and the slide rides the mounting plate. The motor is free to pivot in either direction and the pivot spring ensures proper belt tension on the motor pulley.

The mounting plate has rubber mounting cushions assembled to its rear corners, and the entire assembly is mounted to the washer base by two (2) large hex head screws.

REMOVAL

1. **Disconnect power to the unit.**
2. Tip washer and remove drive belt.
3. Remove the front panel.

©1999 Maytag Appliances Sales Company

4. Remove the two (2) large hex head screws which secure the motor and plate assembly to the base.

5. Remove the screw which secures the wiring clamp to the top of the motor. Disconnect the necessary wiring.

6. Remove the motor and plate assembly from the base.

7. To separate the motor and plate assembly, remove the motor pulley and the two (2) lock nuts which secure the components to the motor studs.

IMPORTANT

After reassembling the motor to the plate, be sure the nylon washers and slides move freely in the radius slots. In cases where washers and slides do not move freely, the sides of the slots may be bent and require alignment. Check the slots for a rough surface or for oil and dirt which must be removed.

The washers are equipped with a nylon/glass filled motor pulley. This pulley is pressed onto the motor shaft where splines formed inside the pulley mesh with mating splines on the motor shaft. Small barbed fingers molded onto the front of the pulley hub, snap into a groove located at the end of the motor shaft.

NOTE: ***The center hole of the motor plate is large enough to provide clearance for the pulley during motor and plate assembly.***

To eliminate the necessity of having to remove and replace the nylon/glass filled pulley when installing a replacement motor, the complete motor/pulley and plate assembly will be serviced (as shown in the illustration) ready to be mounted to the base. However, should a nylon/glass filled pulley become damaged in the field, a service replacement pulley is available. The pulley can be removed and replaced as follows:

REMOVAL: It is necessary to use a puller with at least a three (3) inch spread.

INSTALLATION

1. Remove the shaft coverat ther rear of the motor and "backup" the end of the motor shaft with a socket. This will prevent internal damage to the motor when tapping on the opposite end of the shaft during pulley installation.

2. With the hub fingers out, positon the pulley over the motor shaft until the splines begin to mesh.

3. Place a 1/2 inch I.D. socket, pipe, etc., over the hub fingers and ***gently*** tap the pulley over the splines until it bottoms out on the shaft shoulder (Figure 8-15).

NOTE: ***When the pulley has been properly positioned against the shaft shoulder, the hub fingers at the pulley front should be located in the shaft groove.***

4. Replace the shaft cover at the rear of the motor and reinstall.

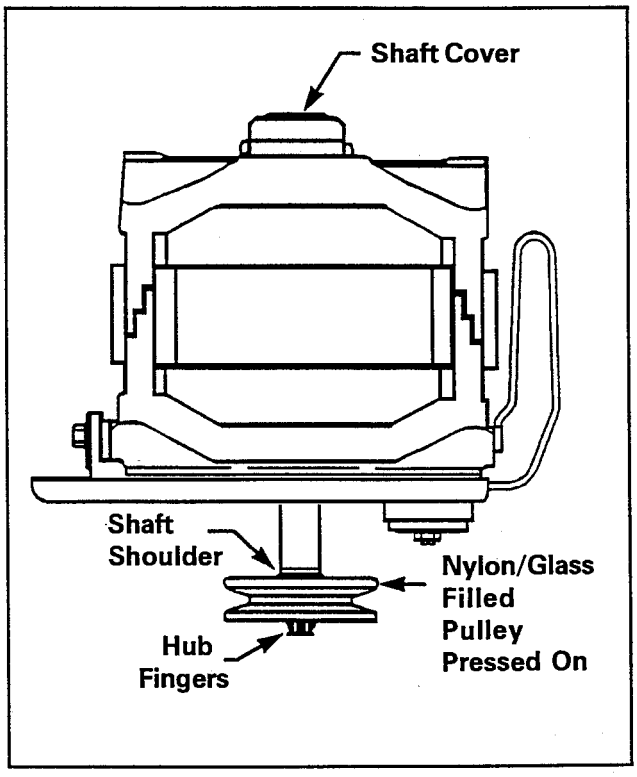

Figure 8-15

©1999 Maytag Appliances Sales Company

WATER LEVEL SWITCH

The water level switch is secured to the control console by means of two locking tabs on the switch body (***Figure 8-16).***

The water level switch is operated by a column of air that becomes trapped in the pressure switch hose. This hose is connected between the diaphragm section of the switch and air bell which is located on the lower portion of the tub. As water enters the tub, a small amount enters the pressure switch hose thereby trapping air in the hose. As the water level increases in the tub, this column of air becomes compressed and exerts pressure on the water level switch diaphragm. When the proper water level is reached the diaphragm actuates a single pole, double throw switch in the water level switch assembly.

The water level switch is quite sensitive and requires only about 0.6 P.S.I. to activate it at the maximum fill position.

It is most important that the hose connections to the switch diaphragm and air bell nipple be airtight, as the smallest air leak will cause erratic operation.

IMPORTANT

The water level switch is adjusted and sealed at the manufacturing source and no adjustments should be made in the field.

Whenever the hose is removed from the water level switch or the air bell nipple, ***DO NOT*** reconnect the hose until all water has been drained from the tub. To ensure proper operation of the water level switch, the hose ***MUST NOT*** have any water in it when reinstalled on the switch. When reconnecting the hose, be sure to slip it over the nipple(s) as far as possible.

Water Level Switch Operation

The circuitry of the machine is designed to put the switch in control of the water mixing valve <u>or</u> the timer motor and drive motor during various phases of the wash cycle.

During the fill cycle, the switch makes a circuit between terminals 7 and 15 which energizes the mixing valve circuit(s). ***(Figure 8-16)*** When the switch is activated, it opens the circuit between terminals 7 and 15 which shuts off the water, and closes a circuit between terminals 7 and 16 which energizes the timer motor and drive motor.

Testing the Water Level Switch

The water level switch can be accessed as previously detailed in ***Section 4*** under ***Control Panel Disassembly***. It can be tested using an ohmmeter and executing the following.

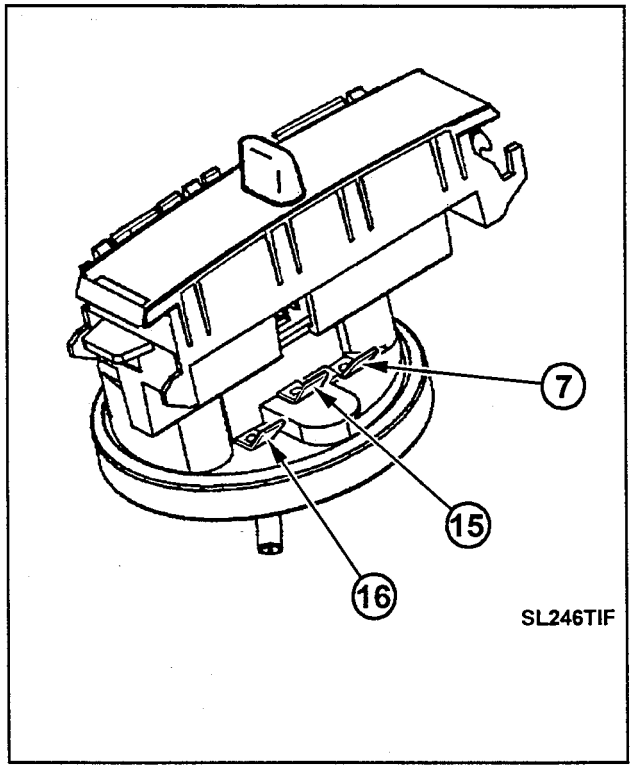

Figure 8-16

©1999 Maytag Appliances Sales Company

- When the tub is empty, ohmmeter leads placed across terminals 7 & 15 should indicate continuity.

- When the tub is filled as per the switch setting and corresponding water depth (refer to Specifications Section under Water Level), terminals 7 & 15 should be open and terminals 7 and 16 should indicate continuity.

Fill Level	Terminals	Status
Empty	7 & 15	Closed
	7 & 16	Open
Full	7 & 15	Open
	7 & 16	Closed

SELECTOR SWITCHES

Selector switch charts indicating the contact alignment for the various positions of each switch used appear on the schematic diagram. These charts should be referred to for specific information on the model being serviced.

Testing Selector Switches

The selector switch can be accessed as previously detailed in ***Section 4*** under ***Control Panel Disassembly***. It can be tested using an ohmmeter and executing the following:

- Remove all switch wiring and perform continuity checks using the respective selector switch chart to indicate the proper continuity.

OPTION SWITCH

The option switches allow the user to select various options regarding Superwash, spin speeds and end of cycle signal.

Model MAV4500/5000	
2 POSITION - OPTION SWITCH	
FUNCTION	CLOSED CIRCUITS
SUPERWASH	BK-RD
NORMAL	OR-RD

Model MAV5057	
3 POSITION - OPTION SWITCH	
FUNCTION	CLOSED CIRCUITS
SUPERWASH	BK*-RD*
EXTRA RINSE	BU**-RD**
CANCEL	OR*-RD*
*1/4" Terminal - **3/16" Terminal	

Model MAV6000/6057/7000	
4 POSITION - OPTION SWITCH	
FUNCTION	CLOSED CIRCUITS
SUPERWASH	BK*-RD*
EXTRA RINSE	BU**-RD**
AUTO. TEMP.	(OPEN)
CANCEL	BR**-RD**, OR*-RD*
*1/4" Terminals - **3/16" Terminals	

©1999 Maytag Appliances Sales Company

Model MAV7057	
3 POSITION - OPTION SWITCH	
FUNCTION	CLOSED CIRCUITS
EXTRA RINSE	BU**-RD**
SOAK ONLY	(OPEN)
CANCEL	BK*-BK*
*1/4 Terminal - **3/16" Terminal	

Model MAV8057	
4 POSITION - OPTION SWITCH	
FUNCTION	CLOSED CIRCUITS
SECOND RINSE	PU**-GY**
GENTLE SPIN	OR*-PK*
SOAK ONLY	(OPEN)
CANCEL	BR*-PU*, BK*-PK*, RD**-GY**
*1/4" Terminal - **3/16" Terminal	

Model MAV8000	
4 POSITION - OPTION SWITCH	
FUNCTION	CLOSED CIRCUITS
EXTRA RINSE	PU**-GY**
NORMAL RINSE	RD**-GY**
GENTLE SPIN	OR*-PK*
NORMAL SPIN	BK*-PK*
*1/4" Terminal - **3/16" Terminal	

Model MAV8500	
4 POSITION - OPTION SWITCH	
FUNCTION	CLOSED CIRCUITS
EXTRA RINSE	PU*-BR*
REMINDER CHIME	RD**-GY**
CLEAN LIGHT	OR*-PK*
CANCEL	BK*-PK*
* 1/4 " Terminal - ** 3/16" Terminal	

Models MAV7057/8000/8057	
4 POSITION - OPTION SWITCH	
FUNCTION	CLOSED CIRCUITS
SUPERWASH	BK*-RD*, BK*-BU*
GENTLEWASH	OR*-BU*, RD*-OR*
TEMP. CONTROL	(OPEN)
CANCEL	BR**-RD**, BK*-BU*, OR*-RD*

WATER TEMPERATURE

The wash and rinse water temperatures can be selected via the water temperature switch on the control console for some models. On upper end models, the water temperature is controlled by a temperature control board, located on the back of the timer. ***(See section discussing Temperature Control Board on page 8-4 thru 8-5.)***

©1999 Maytag Appliances Sales Company

Models MAV4057/4500/5000/5057 8000/8057	
WATER SELECTOR SWITCH	
POSITION	CIRCUIT
H - C	BK*-PK*
W - W	BK*-PU*, OR**-BU**, BK*-PK*
W - C	BK*-PK*, BK*-PU*
C - C	BK*-PU*
* 1/4 " Terminals - ** 3/16" Terminals	

Models MAV6000/6057/7000/7057	
WATER SELECTOR SWITCH	
POSITION	CIRCUIT
H - C	BK*-PK*, BU**-OR**
W - W	BK*-PU*, BK*-OR** BK*-PK*
W - C	BK*-PK*, BK*-PU*, BU** - OR**
C - C	BK*-PU*, BU**-OR**
* 1/4" Terminals - ** 3/16" Terminals	

Models MAV8500	
WATER SELECTOR SWITCH	
POSITION	CIRCUIT
H - C	BK*-RD*
W - W	BK*-RD*, BU**-RD** BU**-OR**
W - C	BK*-RD*, BU**-RD**
C - C	BU**-RD**
* 1/4" Terminal - ** 3/16" Terminal	

LID SWITCH

The lid switch assembly is designed to interrupt voltage to the wash motor in the event the lid is raised. The switch is a single pole, throw type with normally open contacts.

The normally OPEN set of contacts in the switch are held CLOSED by a fusible link (***Figure 8-18).***

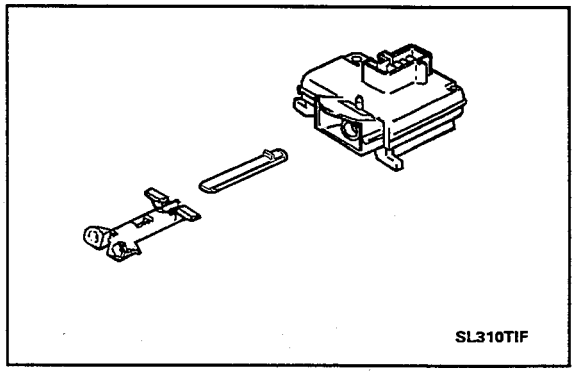

Figure 8-17

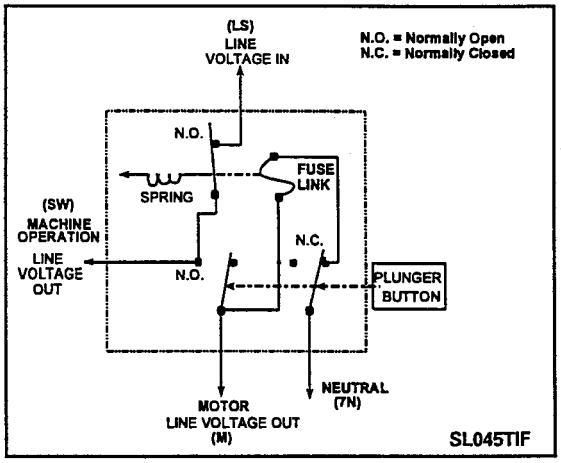

Figure 8-18

Should a switch malfunction, current is directed through the fuse link causing it to breakdown. Once the fuse link opens, the formed contact spring arm opens and the power to the machine is permanently disabled. Note, the schematic representation in ***(Figure 8-19).***

©1999 Maytag Appliances Sales Company

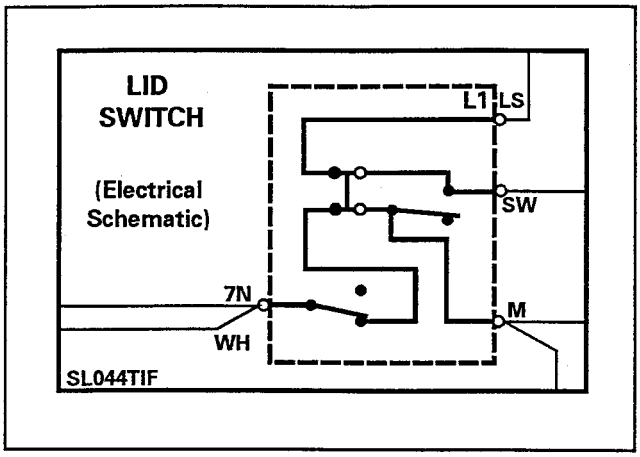

Figure 8-19

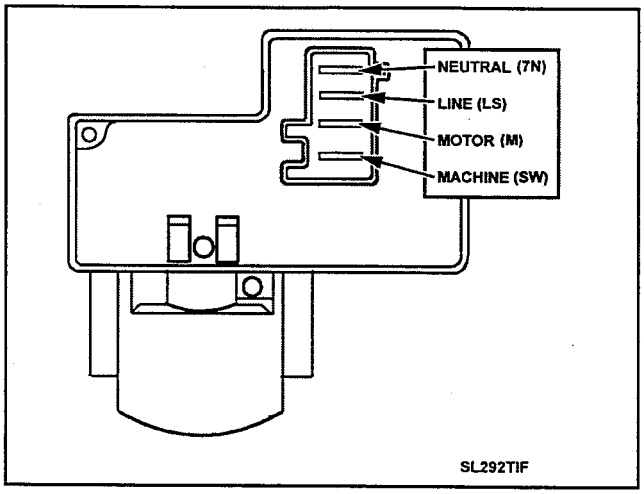

Figure 8-20

Unfortunately, the resistive carbon fuse link cannot be easily detected with a regular ohm meter.

An easier and more accurate method would be to measure the resistance between LINE and MACHINE terminals ***(Figure 8-20).***

A properly functioning machine should show a CLOSED circuit between LINE and MACHINE, regardless of lid position.

Terminals	Continuity Check With Lid Open	Continuity Check with Lid Closed
L1 (Line to SW (Machine	Continuity	Continuity
L1 (Line to M (Motor	No Continuity	Continuity

©1999 Maytag Appliances Sales Company

DIAGNOSTIC FLOW CHARTS

SERVICE PROBLEM	PAGE NUMBER
Will Not Fill	9-2
Slow Fill	9-2
Water Temperature Incorrect	9-2
Over Fills	9-2
Water Leaks	9-3
Fills Will Not Agitate	9-3
Excessive Noise/Vibration	9-3
Spin During Agitation	9-4
Will Not Spin	9-4
Spin Speed Too Slow	9-4
Clothes Wet After Spin	9-4
Tub Full Of Water	9-5
No Timer Advance	9-5
No Rinse Fill	9-5

©1999 Maytag Appliances Sales Company

Will Not Fill/Slow Fill (MAV5000, MAV5057)

- Check that water faucets are on.
- Check for blockage in screens.
- Check for kinked inlet hoses.
- Is washer plugged into power supply?
- Is 120VAC present at outlet ***(Page 1-2)***?
- Check for blown fuse or tripped breaker.
- Pull out timer knob.
- Push water temperature selector button ***(Page 8-17).***
- Check lid switch assembly ***(Page 8-19).***
- Check Pressure Switch for continuity between terminals ***(Page 8-16*** or for loose/damaged wires.
- Check timer contacts ***(Page 8-3).***
- Check for continuity on water valve solenoid(s) ***(Page 8-10).***

Will Not Fill/Slow Fill (MAV6000, MAV6057, MAV7000, MAV7057, MAV8000 & MAV8057)

- Check all symptoms listed under Model MAV5000.
- Check wires at ATC board for good terminal connections ***(Page 8-4).***
- Check for damaged components on ATC board.

Water Temperature Incorrect

- With the tub empty, place machine in normal wash and pull timer knob out.
- Deselect ATC (if available).
- Fully press Hot/Cold Temp setting. Hot water should flow.
- Fully press Warm/Cold setting. Warm water should flow.
- Fully press Cold/Cold setting. Cold water should flow.
- If temperatures are not correct, check for reversed inlet hoses at faucets or at water valve. Or, check for inappropriate wiring of water valve harness, wires reversed in timer connector ***(Page 8-3)***, wires reversed at ATC ***(Page 8-4),*** bad thermistor in water valve ***(Page 8-10),*** and inappropriate wiring of temperature switch ***(Page 8-19).***

Overfills

- Check water pressure to machine. If less than 4 PSI, it is normal for water to flow through valve. Increase water pressure.
- If water pressure is adequate, disconnect power cord from outlet. Does water continue to flow? If yes, replace water valve ***(Page 5-1).***
- Check water level pressure switch for proper operation ***(Page 8-16).***
- Examine air dome hose for leaks ***(Page 4-1 and 5-5).***
- Check for obstruction blocking air dome hoses **(Page 4-5 and 5-5)**.

©1999 Maytag Appliances Sales Company

Water Leaks

- Check top tub gasket *(Page 5-3)*.
- Check water inlet hoses at machine and faucet *(Page 1-5)*.
- Check drain hose clamps at pump and drain inlet.
- Check tub to pump hose clamp.
- Check pump for cracks or seal damage *(Page 5-5)*.
- Check water mixing valve for cracks or hose connection leak.
- Check center seal for leak *(Page 7-2)*.
- Check for water inlet flume damage *(Page 5-2)*.

Fills - Will Not Agitate

IF MOTOR RUNS:

- Check for broken belt.
- Check for pivot spring in place.
- Check for motor mount glides in place.
- Check for problem with transmission *(Page 7-12)*.
- Check drive pulley movement *(Page 7-4)*. Turning pulley clockwise should oscillate the agitator and turning counterclockwise will release the brake for spinning action. If pulley does not turn, replace transmission.
- If pulley and transmission are operating correctly, check for obstruction in pump *(Page 5-5)*.

- If motor does not run:

- Check pressure switch contacts *(Page 8-16)*.
- Check timer contacts *(Page 8-3)*.
- Check selector switch *(Page 8-17)*.
- Check motor start switch *(Page 8-12)*.
- Check motor winding and thermal over load *(Page 8-11 and 8-12)*.

Excessive Noise - Vibration

- Check for proper installation.
- Legs level and secure *(Page 1-3)*.
- Stabilizer rear legs secure *(Page 4-11)*.
- Sound and secure flooring *(Page 4-11)*.
- Check motor pulley and bearings *(Page 8-15)*.
- Check pump pulley and bearing *(Page 5-5)*.
- Check belt.
- Check transmission pulley for correct thrust bearing adjustment *(Page 7-6)*.
- Check transmission for spin bearing noise.
- Check center tub seal *(Page 7-2)*.
- Check agitator for correct installation.
- Remove front panel and check that the six suspension springs are attached to the base and outer tub *(Page 6-2)*.

©1999 Maytag Appliances Sales Company

Spin During Agitation

- Check for thrust bearing misalignment *(Page 7-6)*.
- Check for defective brake package *(Page 7-7)*.
- Check for misalignment of snubber *(Page 7-8)*.

Will Not Spin - Spin Speed Too Slow

WILL THE MOTOR RUN? YES -

- Check for unbalanced load.
- Check for broken or slipping belt.
- Does the house drain system accept water from machine?
- Check for blocked drain hose.
- Check for binding tub seal *(Page 7-3)*.
- Check for partial engagement of brake assembly *(Page 7-13)*.
- Check for obstruction between tubs *(Page 5-5)*.
- Check for proper adjustment on thrust bearing *(Page 7-4)*.
- Check for broken impeller on pump *(Page 5-4)*.
- Complete torque test *(Page 7-12)*.
- If machine appears to pass all checks, place 3 1/2 pound unbalance weight in machine and check for 600 RPM. Monitor wattage readings *(Page 1-8)*.

WILL THE MOTOR RUN? NO -

- Check power supply to the machine *(Page 1-2)*.
- Check lid switch assembly *(Page 8-19)*.
- Check selector option switch *(Page 8-17)*.
- Check timer contacts *(Page 8-2)*.
- Check for pump obstruction *(Page 5-5)*.
- Check motor *(Page 8-11)*.

Clothes Wet After Spin

- Review section titled "Spin Speed Too Slow."
- Check for unbalanced load.
- Check for slipping belt.
- Check reference marks on drive pulley and cams *(Page 7-6)*.
- Check for partial engagement of brake assembly *(Page 7-13)*.
- Check pump for obstruction *(Page 5-5)*.
- Check for drain hose restriction.
- Check for drain plumbing restriction.

©1999 Maytag Appliances Sales Company

Tub Full Of Water

- Check for drain hose restriction.
- Check for drain plumbing restriction.
- Check pump for obstruction or proper operation ***(Page 5-5).***
- Check pump pulley ***(Page 5-5).***
- Check for proper polarity of motor against timer sequence chart ***(Page 8-3).***
- Check for loose or slipping belt.
- Check reference marks on drive pulley and cams ***(Page 7-6).***

No Timer Advance

- Check for proper wash cycle selected.

NOTE: Soak sequence during Delicate Cycle (Page 8-3).

- Check for proper voltage at timer motor.
- If voltage is good, check timer motor for correct ohm reading ***(Page 1-8).***
- If no voltage, check voltage at outlet ***(Page 1-2).***
- Check lid switch assembly ***(Page 8-19).***
- Check timer harness connector for proper wiring ***(Page 8-3).***
- Check water level switch (during agitation) ***(Page 8-16).***
- Check wiring of option selector switches

No Rinse Fill

- Check to see if washer will fill with warm and cold water in WASH cycle.
- If washer will not fill in wash cycle, refer to the "Will Not Fill" section.
- Check timer ***(Page 8-3)*** or microprocessor ATC (if so equipped) connections ***(Page 8-6).***
- The **analog ATC** only regulates the WASH fill, it affects the Warm - Warm and **does not** affect the RINSE water fill.
- The **microprocessor ATC** regulates all water flow in the machine.
- Check water temperature selector switch for continuity in rinse cycle ***(Page 8-18).***

©1999 Maytag Appliances Sales Company

©1999 Maytag Appliances Sales Company

SECTION 10. ELECTRICAL SCHEMATICS

An electrical schematic is folded and placed inside the control console of each washer. It can be accessed by removing the control console *(Page 4-1).*

The schematic diagram provides vital information needed to check a circuit and pinpoint a malfunctioning electrical component *(Chapter 9).*

The schematic diagram contains the following:

- **Connection Diagram**
- **Cycle Sequence Chart**
- **Motor Harness Connector Identification**
- **ATC Harness Connector Identification (If applicable to the model).**

A thorough understanding of the information available on the schematic diagram is a pre-requisite for quick and accurate troubleshooting.

The following electrical schematics are illustrated for the following models:

MODEL NUMBER	PAGE NUMBER
MAV4057	10-2
MAV4500	10-2
MAV5000	10-3
MAV5057	10-4
MAV6000	10-5
MAV6057	10-6
MAV7000	10-7
MAV7057	10-8
MAV8000	10-9
MAV8057	10-10
MAV8500	10-11

©1999 Maytag Appliances Sales Company

SCHEMATIC MAV4057 & 4500

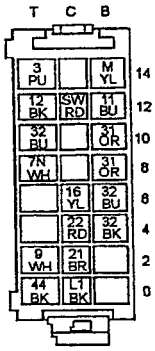

TIMER INFORMATION				TIME CHART - 180 SECONDS PER INCREMENT (5, 10, 15, 20, 25, 30, 35, 40, 45)
CAM NO.		CIRCUIT	FUNCTION	
0	T	L1 TO 44	LINE SWITCH	
	B			
2	T	21 TO 9	REVERSING SPIN	
	B	21 TO 32	REVERSING AGITATE	
4	T	22 TO 9	REVERSING AGITATE	
	B	22 TO 32	REVERSING SPIN	
6	T	16 TO 7N	SPIN & TIMER MOTOR BYPASS	
	B	16 TO 32	ASSURED HIGH SPEED	
8	T	16 TO 7N	SPIN & TIMER MOTOR BYPASS	
	B	16 TO 31	SLOW SPEED	
10	T	16 TO 32	HIGH SPEED AGITATE	
	B	16 TO 31	SLOW SPEED AGITATE	
12	T	SW TO 12	WASH FILL	
	B	SW TO 11	RINSE FILL	
14	T	11 TO 3	WASH FILL	
	B	11 TO M	SUB-INTERVAL SPRAY	

CAM OPEN
CAM CLOSED
CAM CLOSED EXCEPT FOR SHORT PAUSE
CAM MAY BE OPEN OR CLOSED
CAM CLOSED FOR SHORT TIME DURING SWITCHING INTERVAL
CAM OPEN FOR 100 SECONDS CLOSED FOR 15 THEN OPEN FOR 65 SECONDS

FUNCTION	OFF	FILL & WASH	WASH	SPIN & SPRAY	FILL & RINSE	SPIN	OFF	FILL & WASH	WASH	WASH	WASH	SPIN & SPRAY	SPIN & SPRAY	FILL & RINSE	SPIN	OFF	FILL & WASH	WASH	SPIN	FILL & RINSE	SPIN & SPRAY	SPIN
CYCLE		WHITES						DELICATES									COLORS					

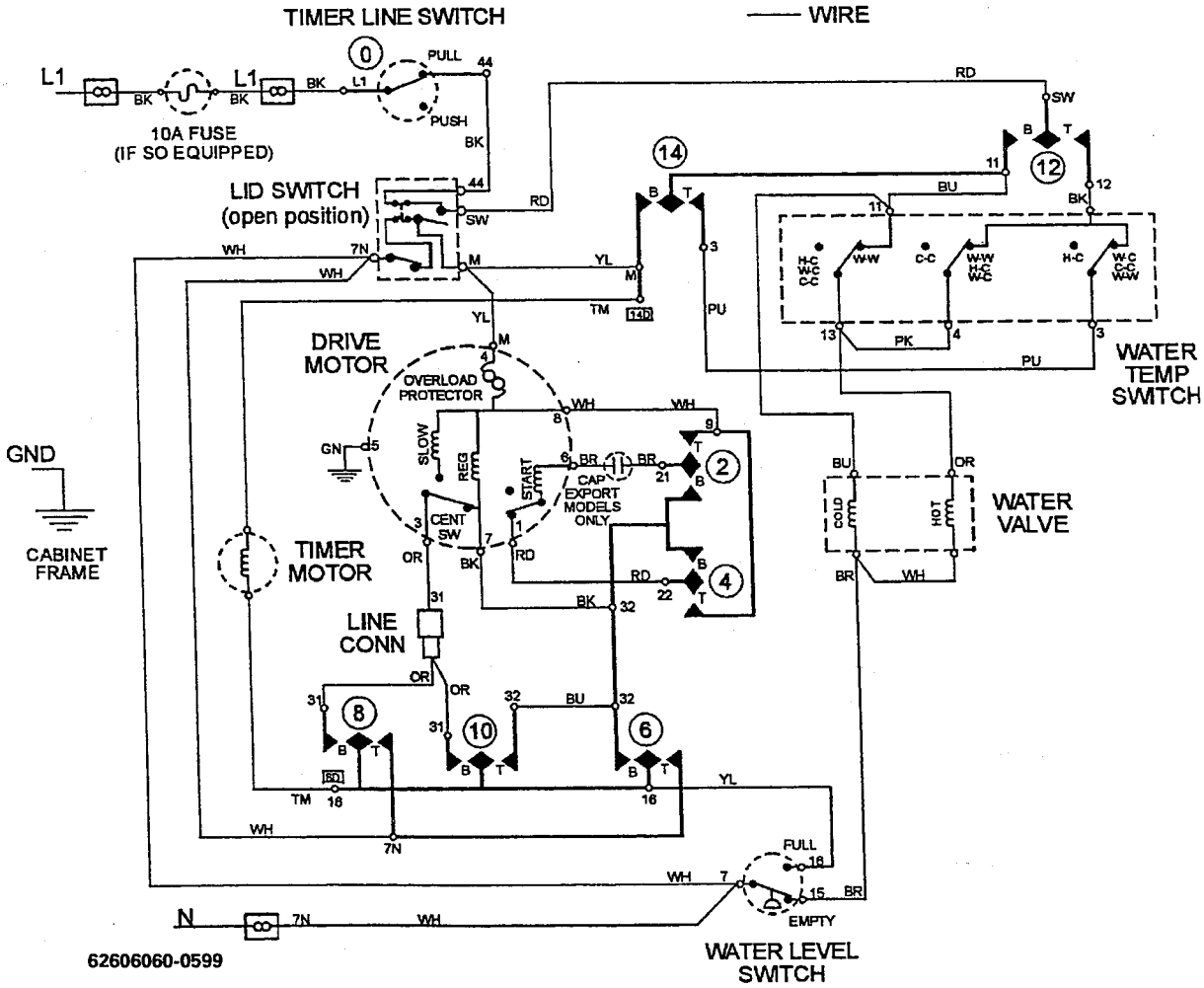

SL446TIF

©1999 Maytag Appliances Sales Company

SCHEMATIC MAV5000

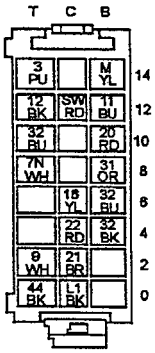

TIMER INFORMATION				TIME CHART - 180 SECONDS PER INCREMENT (5, 10, 15, 20, 25, 30, 35, 40, 45)
CAM NO.		CIRCUIT	FUNCTION	
0	T	L1 TO 44	LINE SWITCH	
	B			
2	T	21 TO 9	REVERSING SPIN	
	B	21 TO 32	REVERSING AGITATE	
4	T	22 TO 9	REVERSING AGITATE	
	B	22 TO 32	REVERSING SPIN	
6	T	16 TO 7N	SPIN & TIMER MOTOR BYPASS	
	B	16 TO 32	ASSURED HIGH SPEED	
8	T	16 TO 7N	SPIN & TIMER MOTOR BYPASS	
	B	16 TO 31	ASSURED SLOW SPEED	
10	T	16 TO 32	HIGH SPEED AGITATE	
	B	16 TO 20	SELECTED SPEED AGITATE	
12	T	SW TO 12	WASH FILL	
	B	SW TO 11	RINSE FILL	
14	T	11 TO 3	WASH FILL	
	B	11 TO M	SUB-INTERVAL SPRAY	

CAM OPEN
CAM CLOSED
CAM CLOSED EXCEPT FOR SHORT PULSE
CAM MAY BE OPEN OR CLOSED
CAM CLOSED FOR SHORT TIME DURING SWITCHING INTERVAL
CAM OPEN FOR 100 SECONDS CLOSED FOR 15 THEN OPEN FOR 15 SECONDS

FUNCTION	OFF	FILL & WASH	WASH	SPIN & SPRAY	SPIN	FILL & RINSE	SPIN	OFF	FILL & WASH	WASH	SPIN & SPRAY	SPIN	FILL & RINSE	SPIN	OFF	FILL & WASH	WASH	SPIN	FILL & RINSE	SPIN & SPRAY	SPIN
CYCLE		WHITES							DELICATES							COLORS					

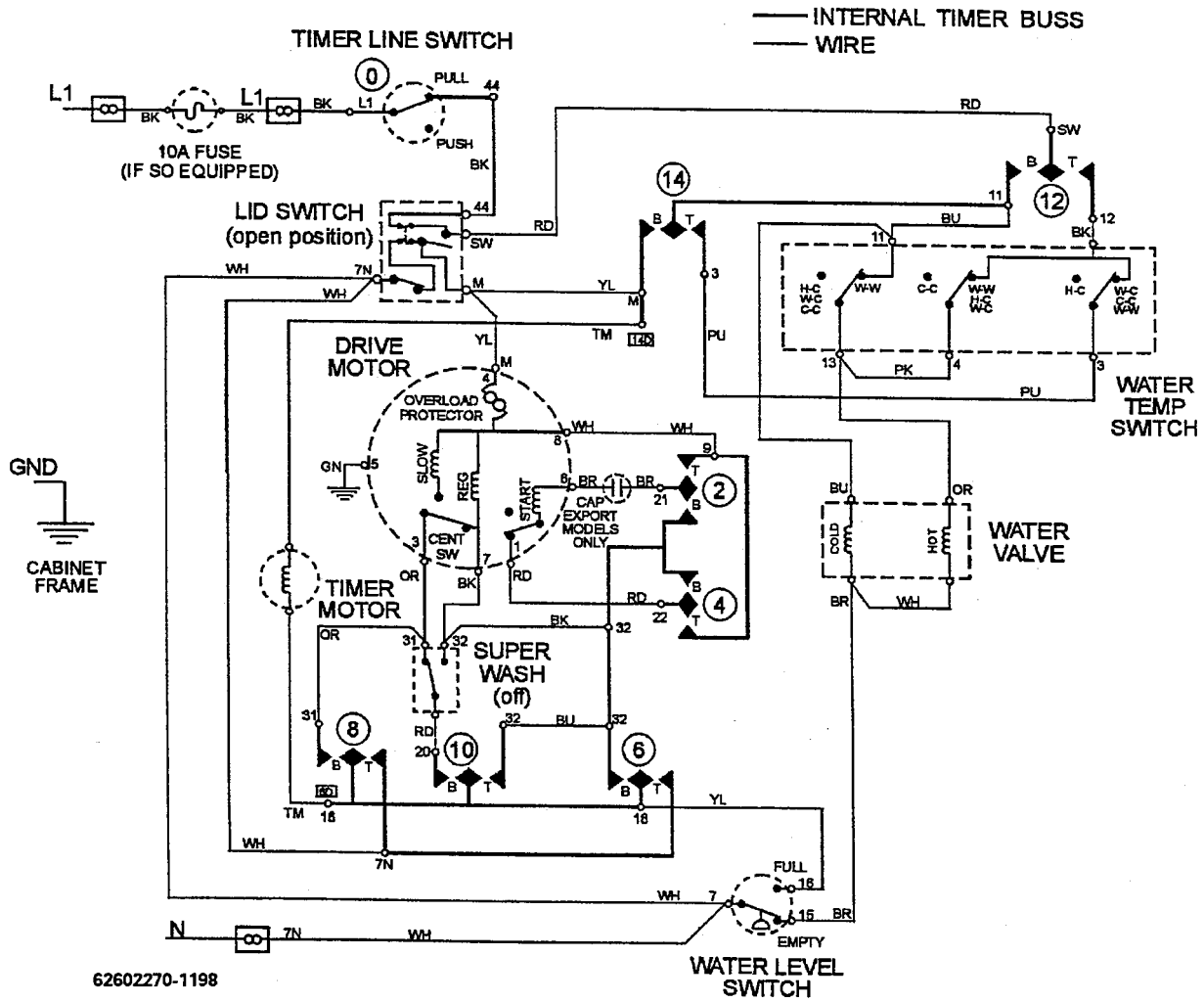

SL247TIF

©1999 Maytag Appliances Sales Company

SCHEMATIC MAV5057

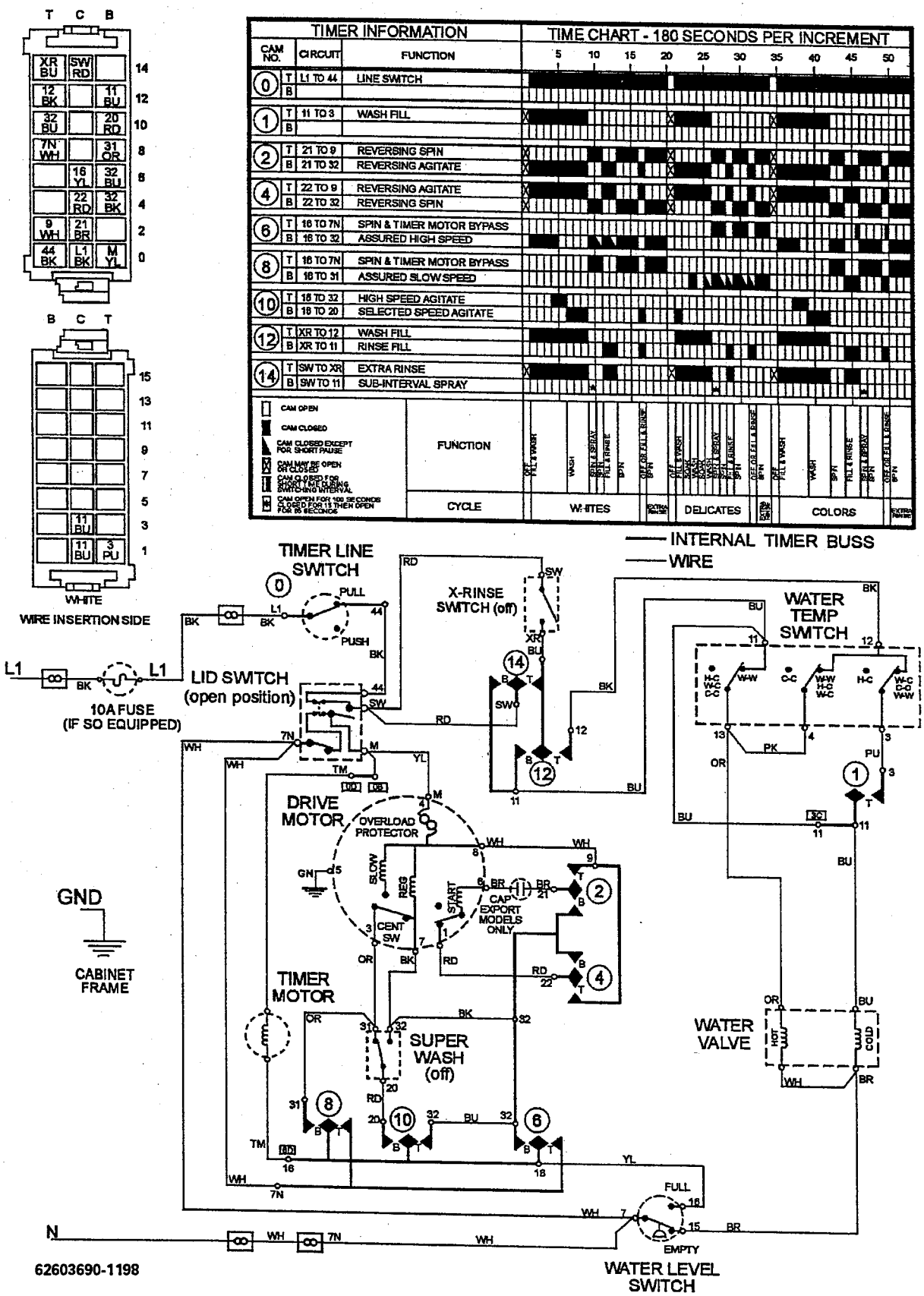

©1999 Maytag Appliances Sales Company

SCHEMATIC MAV6000

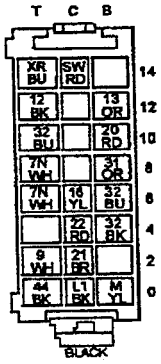

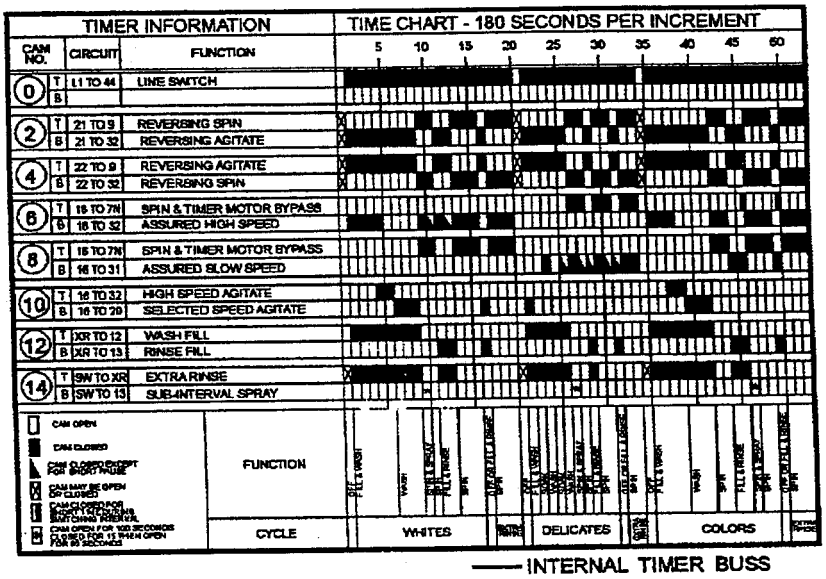

—— INTERNAL TIMER BUSS
—— WIRE

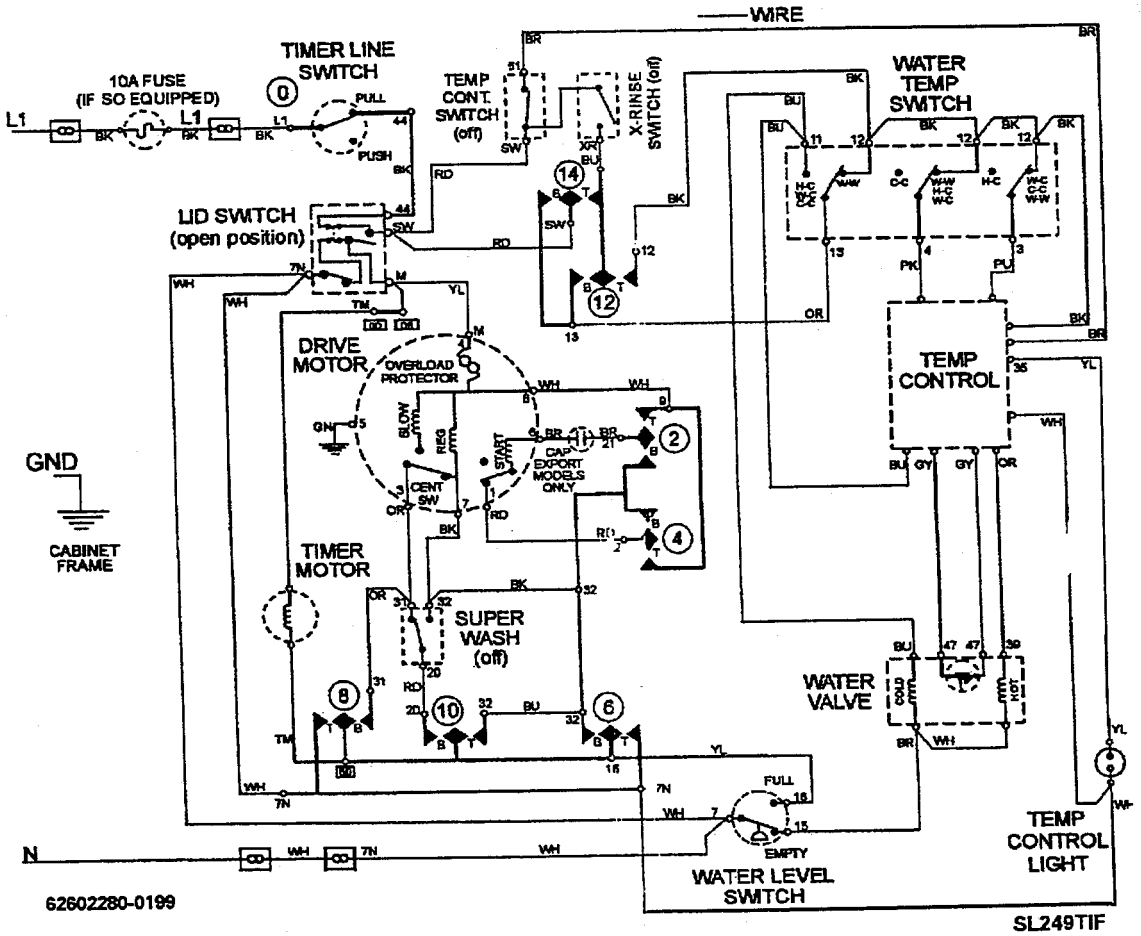

©1999 Maytag Appliances Sales Company

SCHEMATIC MAV6057

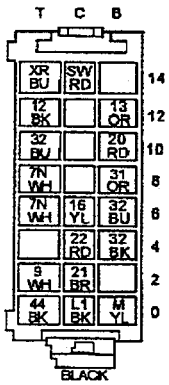

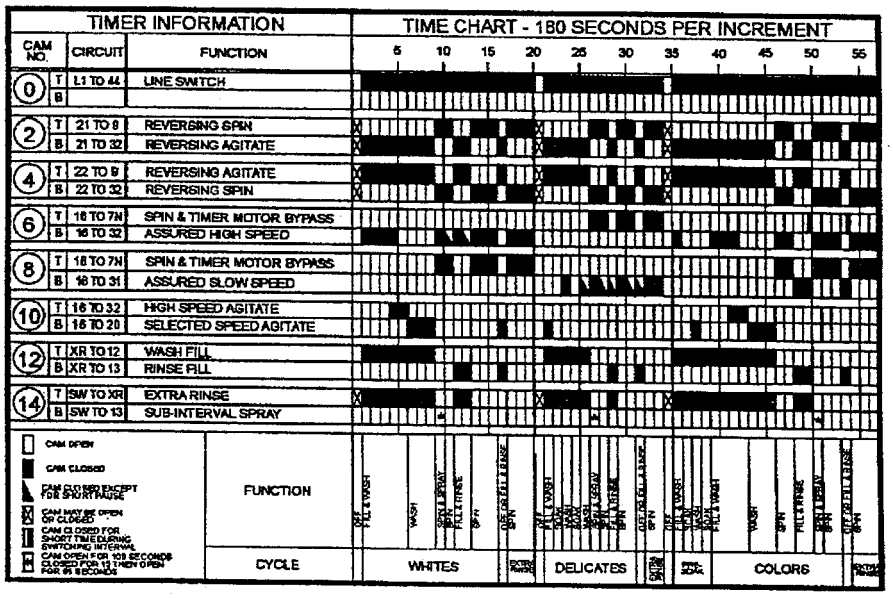

INTERNAL TIMER BUSS

WIRE

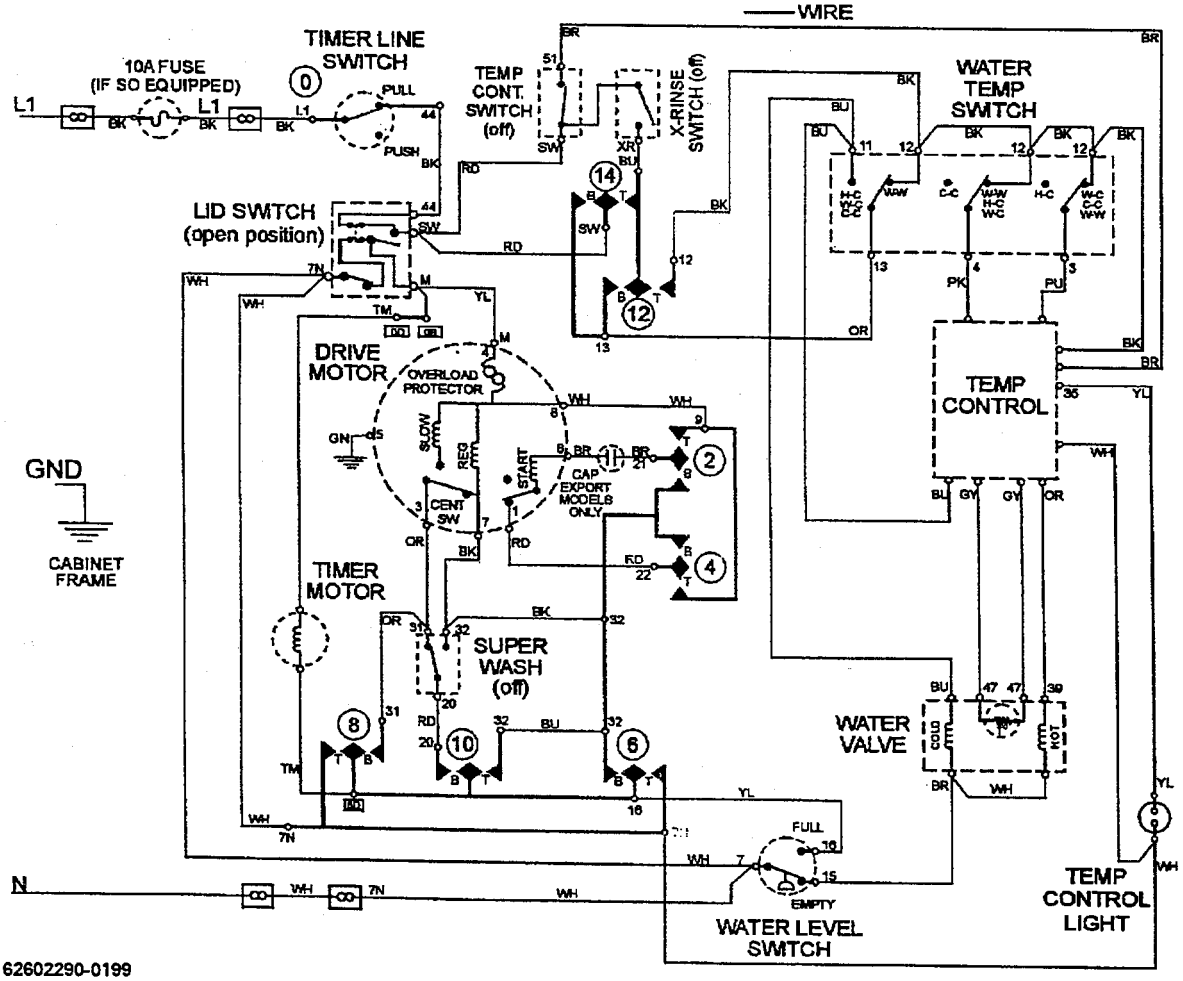

62602290-0199

sl250tif

©1999 Maytag Appliances Sales Company

SCHEMATIC MAV7000

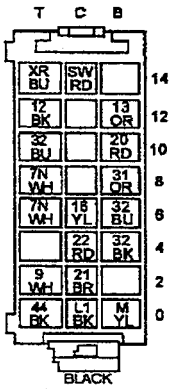

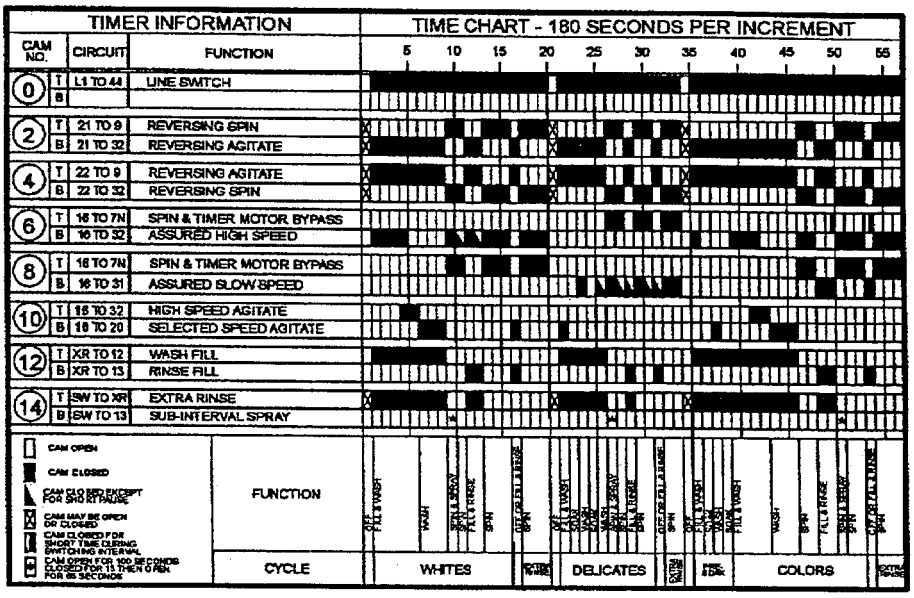

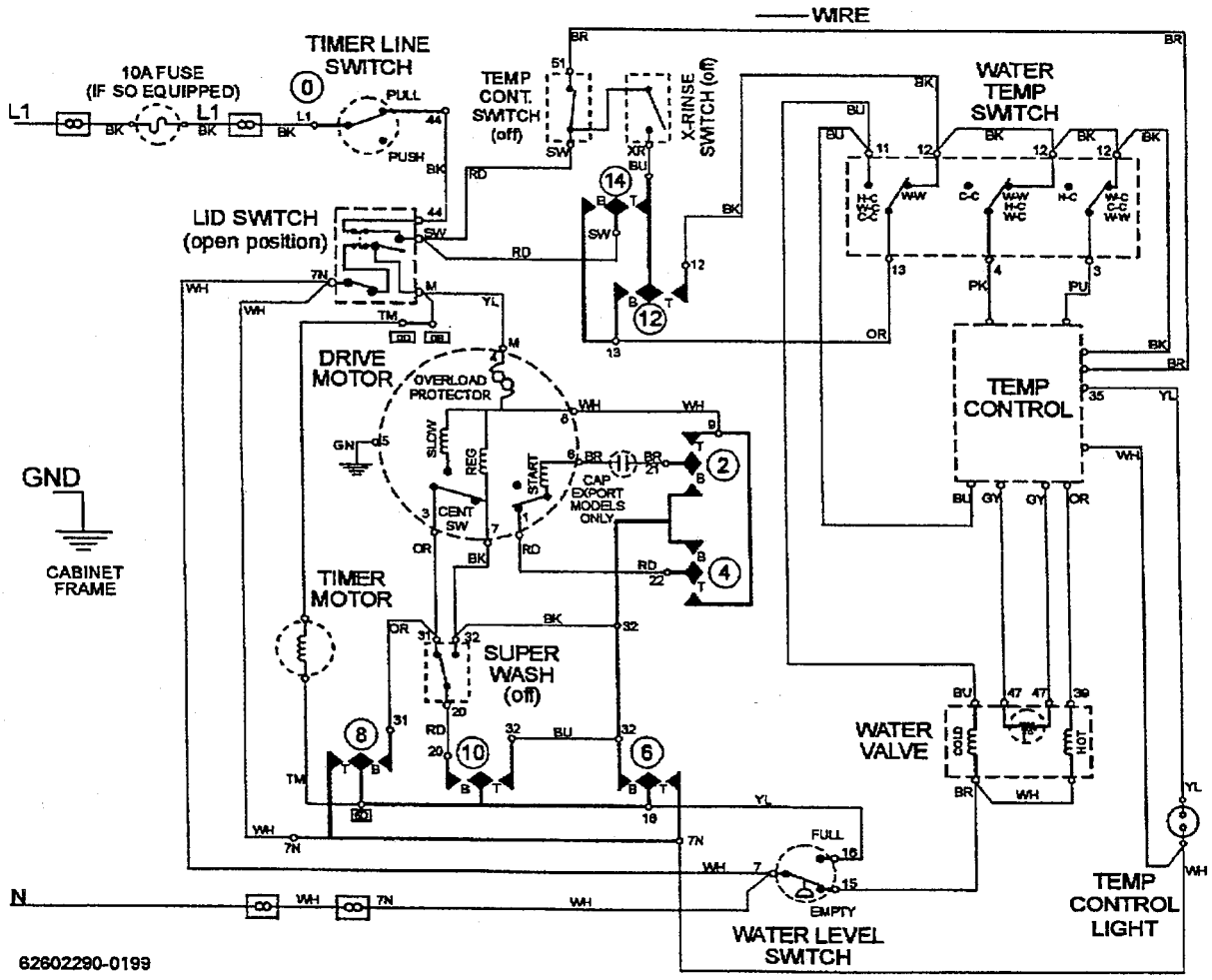

sl251tif

©1999 Maytag Appliances Sales Company

SCHEMATIC MAV7057

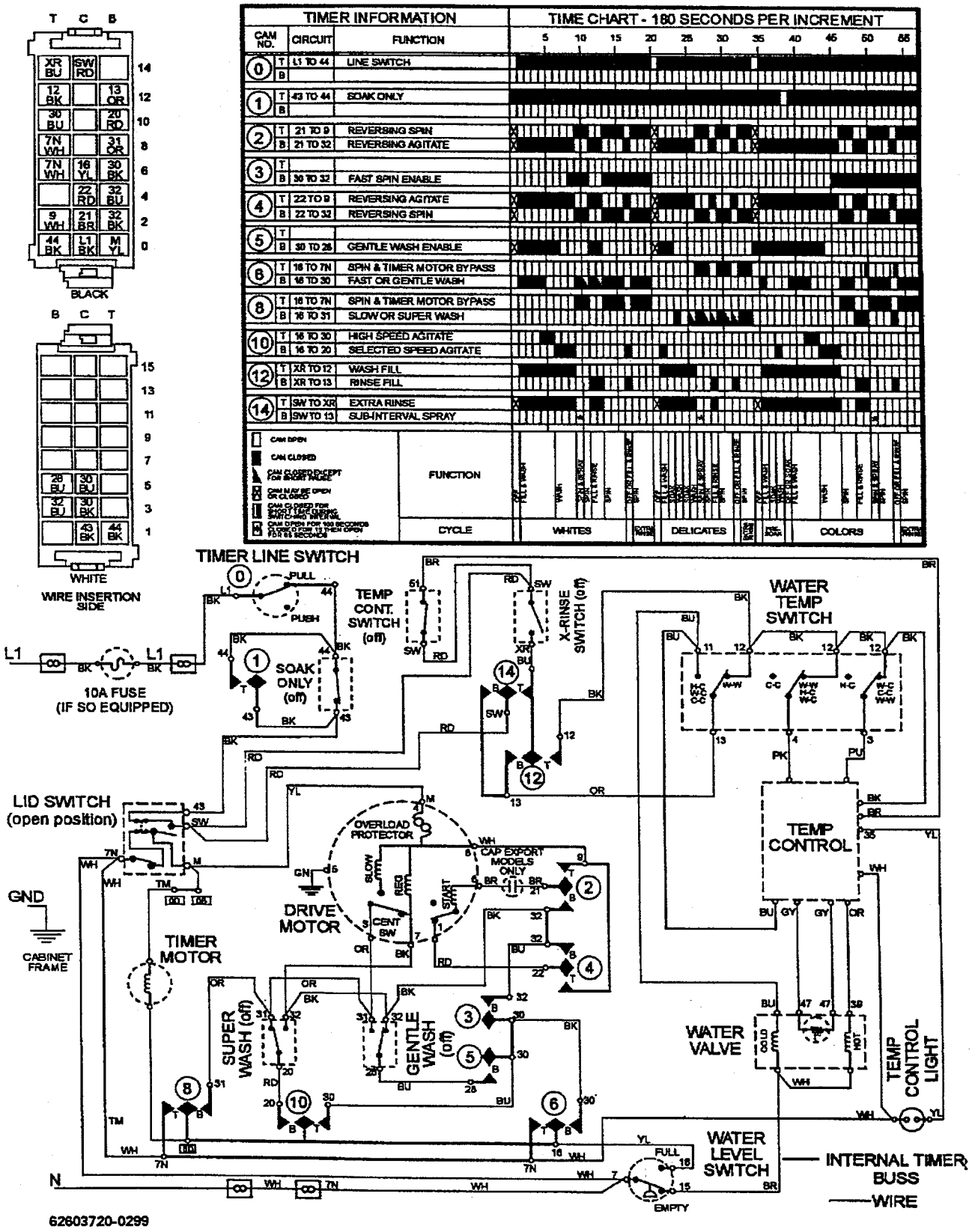

©1999 Maytag Appliances Sales Company

SCHEMATIC MAV8000

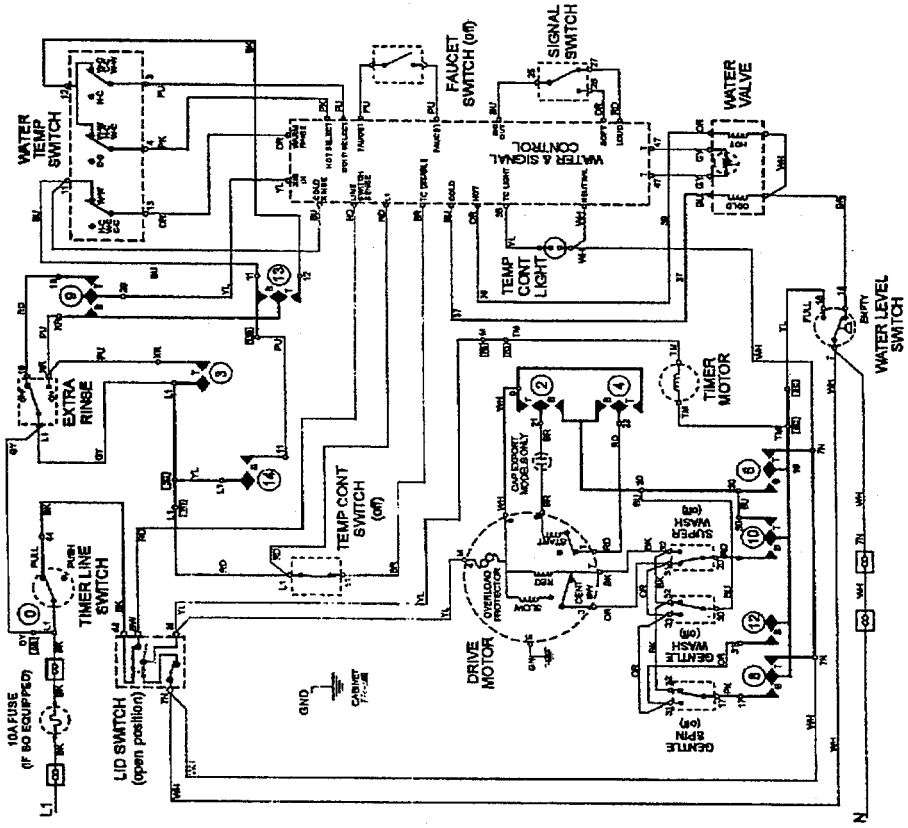

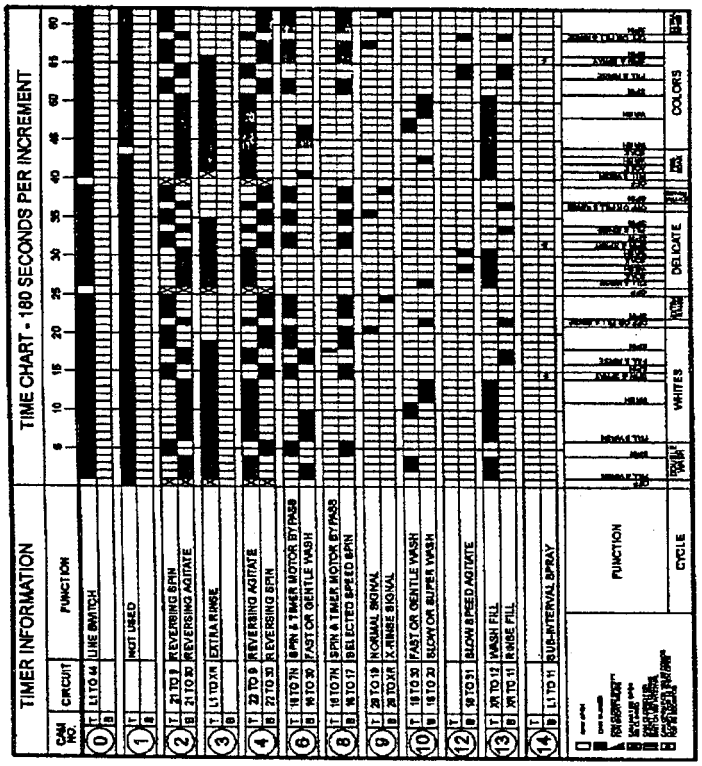

62602300-1298

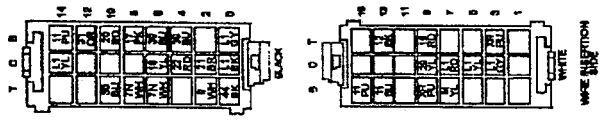

SL253TIF

©1999 Maytag Appliances Sales Company

SCHEMATIC MAV8057

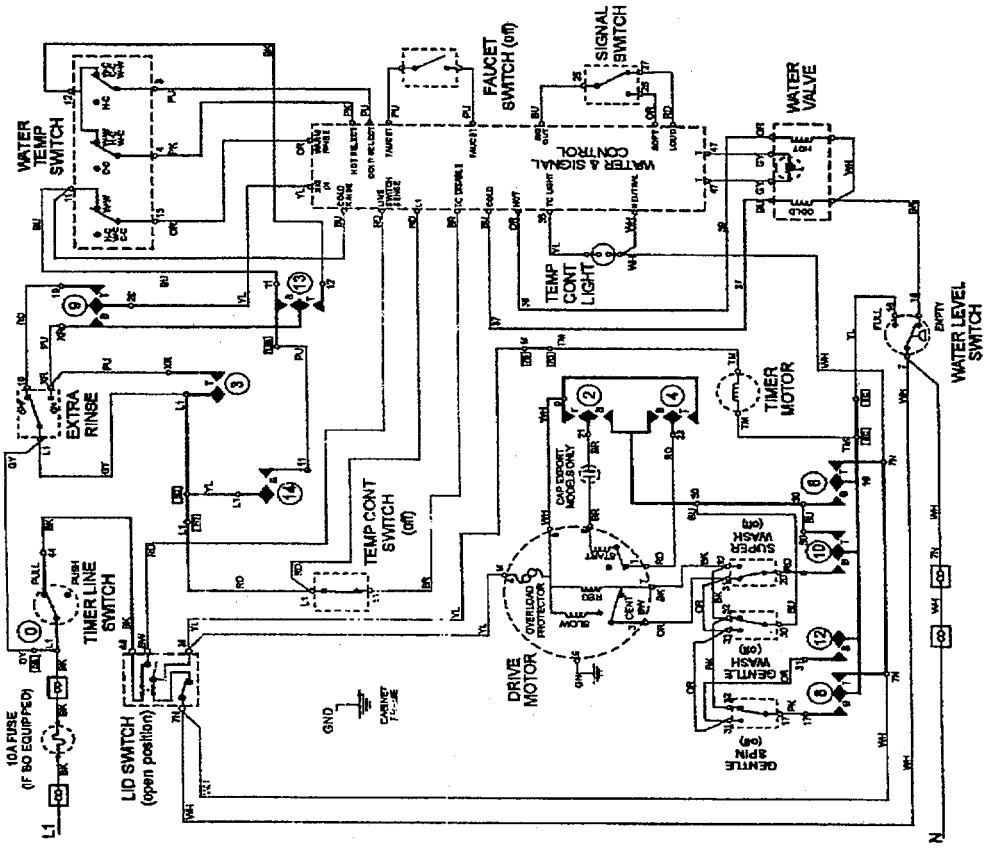

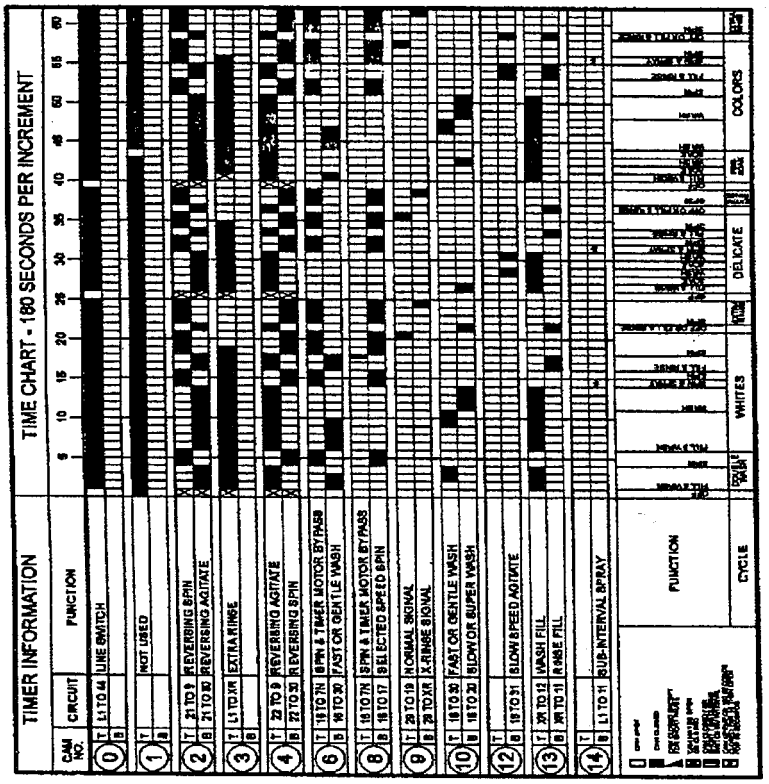

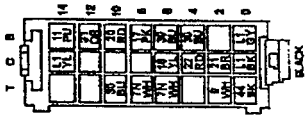

62602300-1298

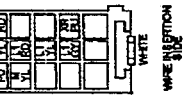

SL253TIF

©1999 Maytag Appliances Sales Company

SCHEMATIC MAV8500

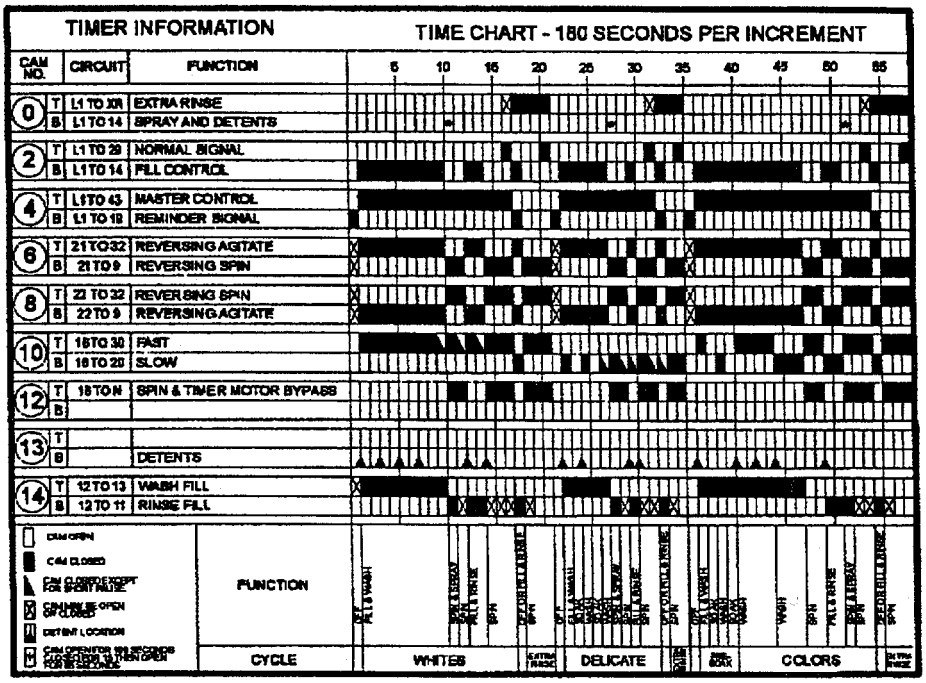

—— INTERNAL TIMER BUSS
—— WIRE

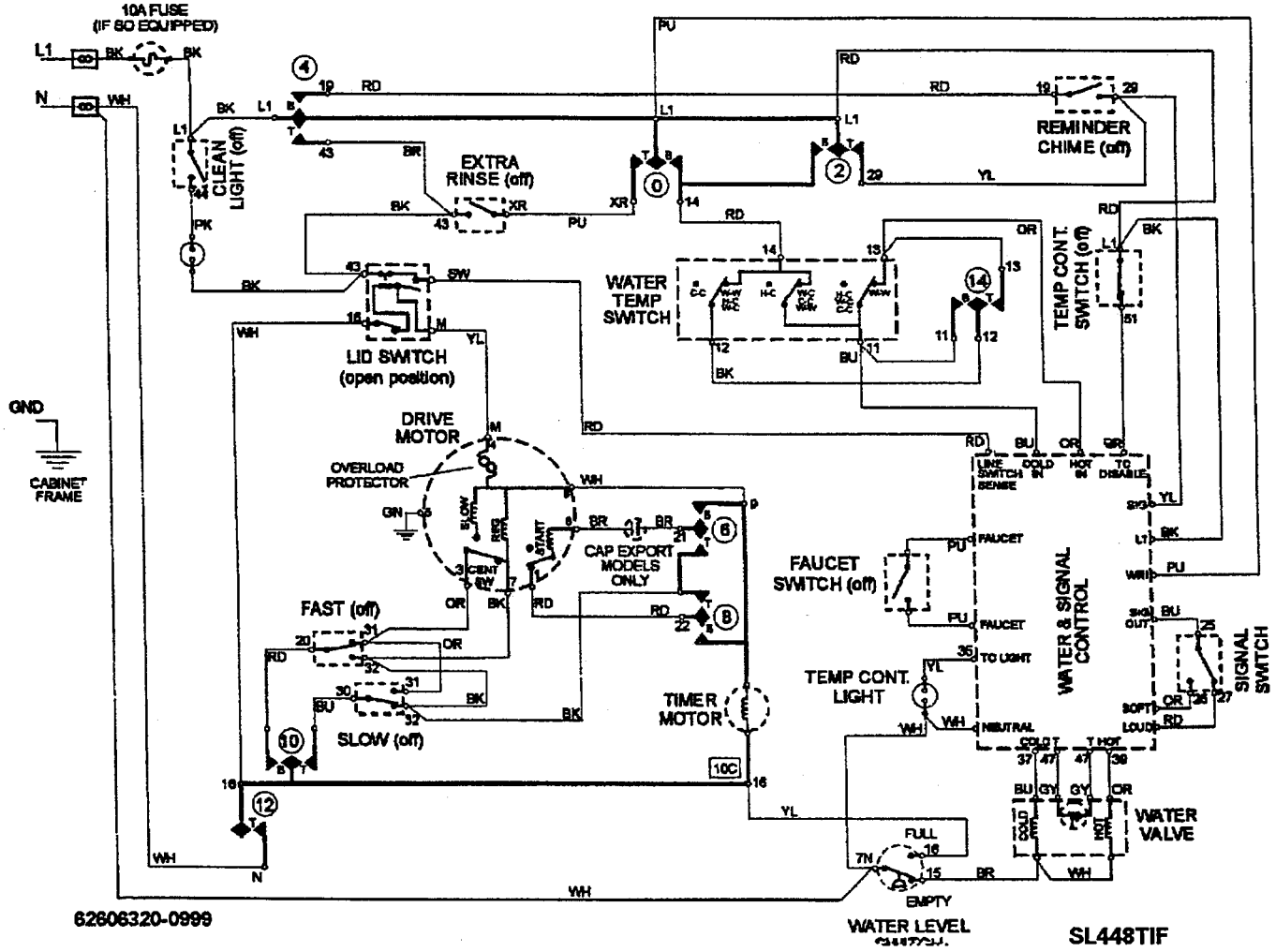

62606320-0999

SL448TIF

©2000 Maytag Appliances Sales Company

SCHEMATIC MAV6200

TIMER INFORMATION				TIME CHART - 180 SECONDS PER INCREMENT (5 10 15 20 25 30 35 40 45 50)
CAM NO.		CIRCUIT	FUNCTION	
0	T	7 TO N	FILL & AGITATE CONTROL	
	B	7 TO N	SUB-INTERVAL SPRAY	
2	T	12 TO 13	WASH FILL	
	B	12 TO 11	RINSE FILL	
4	T		NOT USED	
	B			
6	T	21 TO 32	REVERSING AGITATE	
	B	21 TO 9	REVERSING SPIN	
8	T	22 TO 32	REVERSING SPIN	
	B	22 TO 9	REVERSING AGITATE	
10	T	16 TO 32	ASSURED HIGH SPEED	
	B	16 TO 20	SELECTED SPEED	
14	T	N TO 16	SPIN & TIMER MOTOR BYPASS	
	B	N TO XR	EXTRA RINSE	

CAM OPEN
CAM CLOSED
CAM CLOSED EXCEPT FOR SHORT PAUSE
CAM MAYBE OPEN OR CLOSED
CAM CLOSED FOR SHORT TIME DURING SWITCHING INTERVAL
CAM OPEN FOR 100 SECONDS CLOSED FOR 15 THEN OPEN FOR 65 SECONDS

FUNCTION: OFF, FILL & WASH, WASH, SPIN & SPRAY, SPIN, FILL & RINSE, SPIN, OFF OR FILL & RINSE, SPIN, OFF, FILL & WASH, WASH, SOAK, WASH, SOAK, WASH, SPIN & SPRAY, SPIN, FILL & RINSE, SPIN, OFF OR FILL & RINSE, SPIN, OFF, FILL & WASH, WASH, SPIN, FILL & RINSE, SPIN & SPRAY, SPIN, OFF OR FILL & RINSE, SPIN

CYCLE: WHITES, EXTRA RINSE, DELICATES, EXTRA RINSE, COLORS, EXTRA RINSE

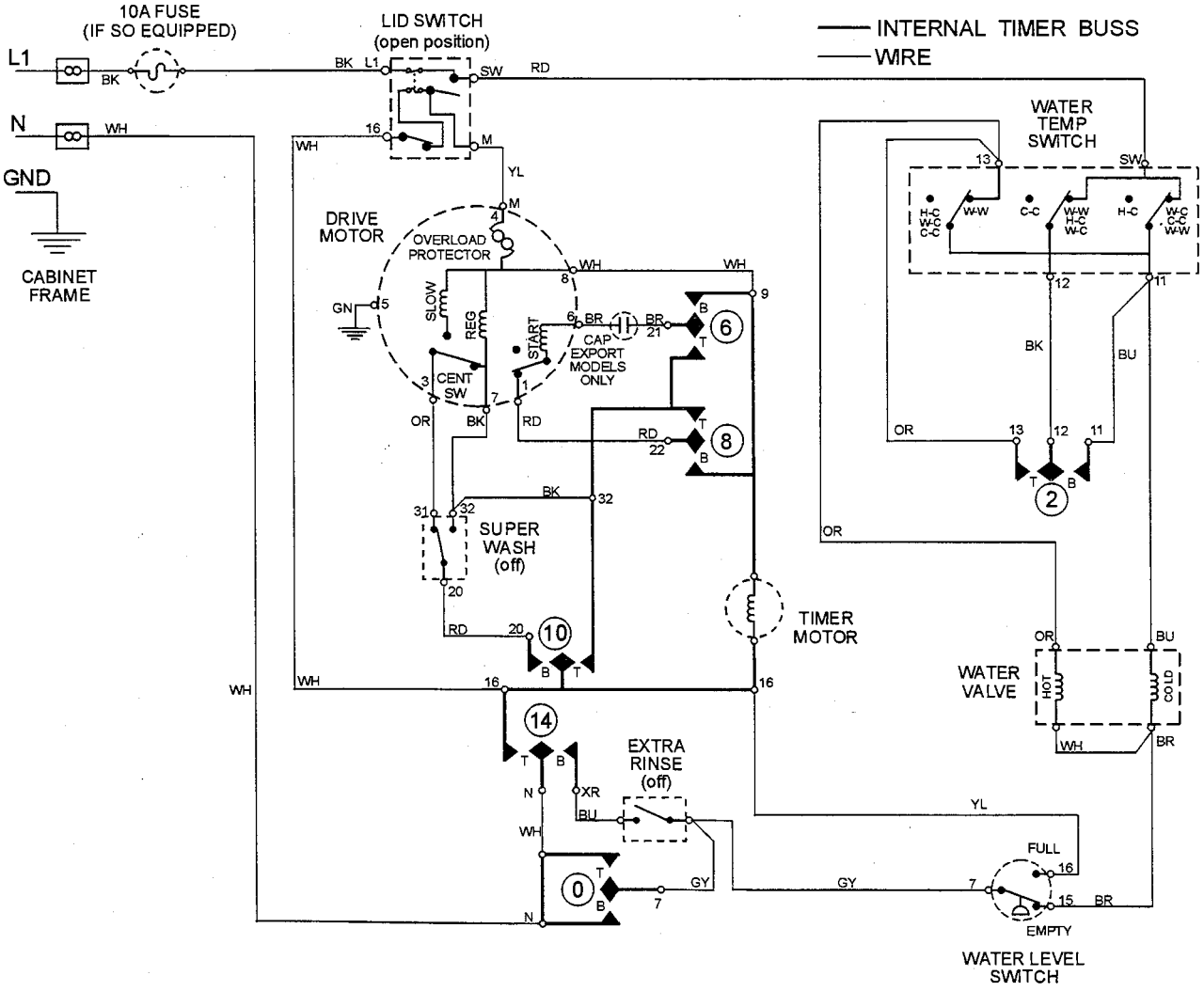

6 2607720

©2000 Maytag Appliances Sales Company

SCHEMATIC MAV6257

TIMER INFORMATION			
CAM NO.		CIRCUIT	FUNCTION
0	T	7 TO N	FILL & AGITATE CONTROL
	B	7 TO N	SUB-INTERVAL SPRAY
2	T	12 TO 13	WASH FILL
	B	12 TO 11	RINSE FILL
4	T	SW TO 51	ATC DISABLE
	B		
6	T	21 TO 32	REVERSING AGITATE
	B	21 TO 9	REVERSING SPIN
8	T	22 TO 32	REVERSING SPIN
	B	22 TO 9	REVERSING AGITATE
10	T	16 TO 32	ASSURED HIGH SPEED
	B	16 TO 20	SELECTED SPEED
14	T	N TO 16	SPIN & TIMER MOTOR BYPASS
	B	N TO XR	EXTRA RINSE

TIME CHART - 180 SECONDS PER INCREMENT

5 10 15 20 25 30 35 40 45 50

CAM OPEN
CAM CLOSED
CAM CLOSED EXCEPT FOR SHORT PAUSE
CAM MAY BE OPEN OR CLOSED
CAM CLOSED FOR SHORT TIME DURING SWITCHING INTERVAL
CAM OPEN FOR 100 SECONDS CLOSED FOR 15 THEN OPEN FOR 65 SECONDS

FUNCTION: OFF, FILL & WASH, WASH, SPIN & SPRAY, SPIN, FILL & RINSE, SPIN, OFF OR FILL & RINSE, SPIN, OFF, FILL & WASH, SOAK, WASH, SOAK, WASH, SPIN & SPRAY, SPIN, FILL & RINSE, SPIN, OFF OR FILL & RINSE, SPIN, OFF, FILL & WASH, WASH, SPIN, FILL & RINSE, SPIN & SPRAY, SPIN, OFF OR FILL & RINSE, SPIN

CYCLE: WHITES, EXTRA RINSE, DELICATES, EXTRA RINSE, COLORS, EXTRA RINSE

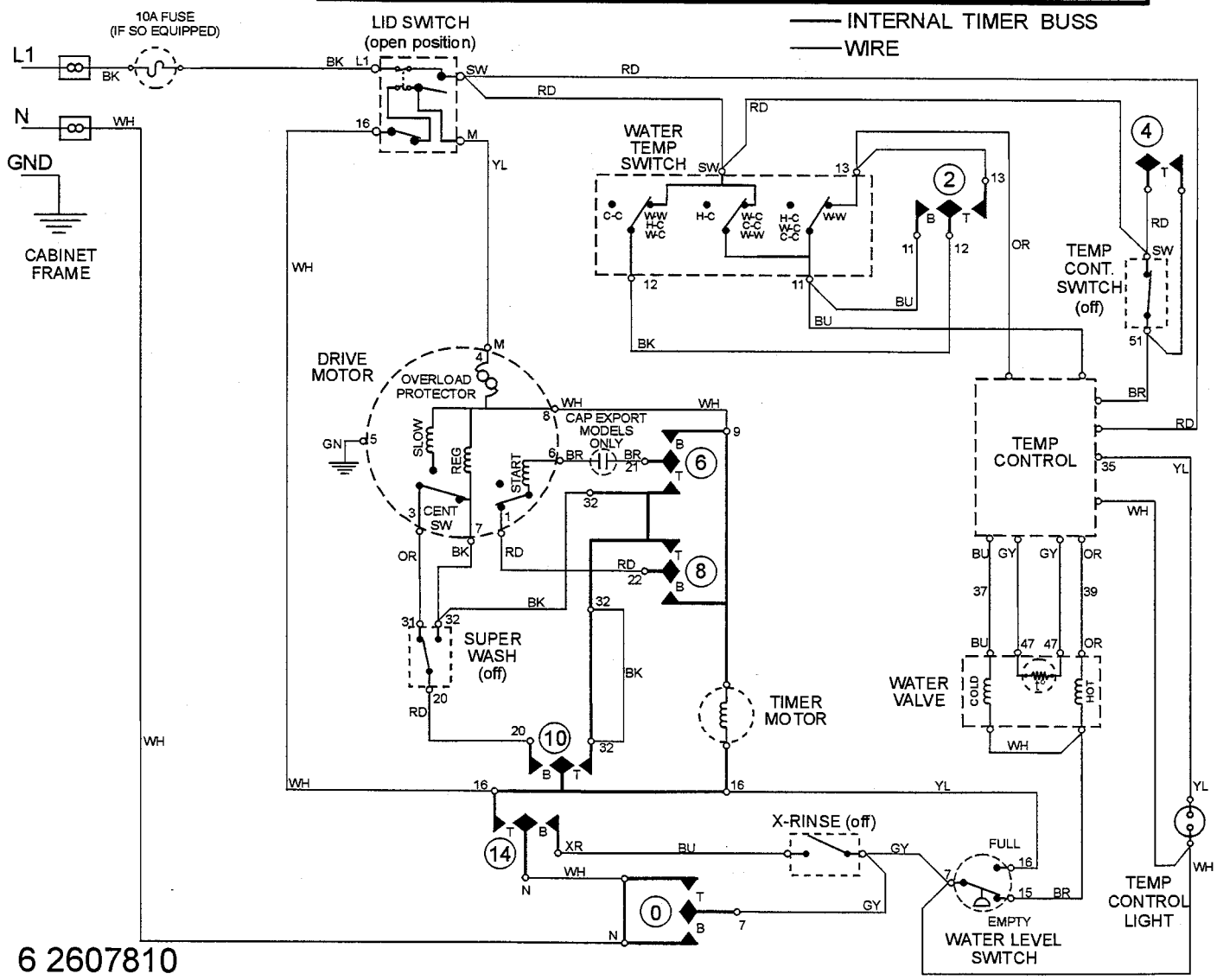

6 2607810

©2000 Maytag Appliances Sales Company

SCHEMATIC MAV6300

TIMER INFORMATION				TIME CHART - 180 SECONDS PER INCREMENT
CAM NO.		CIRCUIT	FUNCTION	5 10 15 20 25 30 35 40 45 50
0	T	7 TO N	FILL & AGITATE CONTROL	
	B	7 TO N	SUB-INTERVAL SPRAY	* * *
2	T	12 TO 13	WASH FILL	
	B	12 TO 11	RINSE FILL	
4	T		NOT USED	
	B			
6	T	21 TO 32	REVERSING AGITATE	
	B	21 TO 9	REVERSING SPIN	
8	T	22 TO 32	REVERSING SPIN	
	B	22 TO 9	REVERSING AGITATE	
10	T	16 TO 32	ASSURED HIGH SPEED	
	B	16 TO 20	SELECTED SPEED	
14	T	N TO 16	SPIN & TIMER MOTOR BYPASS	
	B	N TO XR	EXTRA RINSE	

CAM OPEN
CAM CLOSED
CAM CLOSED EXCEPT FOR SHORT PAUSE
CAM MAY BE OPEN OR CLOSED
CAM CLOSED FOR SHORT TIME DURING SWITCHING INTERVAL
CAM OPEN FOR 100 SECONDS CLOSED FOR 15 THEN OPEN FOR 65 SECONDS

FUNCTION	OFF FILL & WASH	WASH	SPIN & SPRAY	SPIN	FILL & RINSE	SPIN	OFF OR FILL & RINSE	SPIN	OFF FILL & WASH	SOAK	WASH	WASH	SOAK	SPIN & SPRAY	SPIN & RINSE	SPIN	OFF OR FILL & RINSE	SPIN	OFF FILL & WASH	WASH	SPIN	FILL & RINSE	SPIN & SPRAY	SPIN	OFF OR FILL & RINSE	SPIN
CYCLE	WHITES						EXTRA RINSE		DELICATES with HANDWASH								EXTRA RINSE		COLORS							EXTRA RINSE

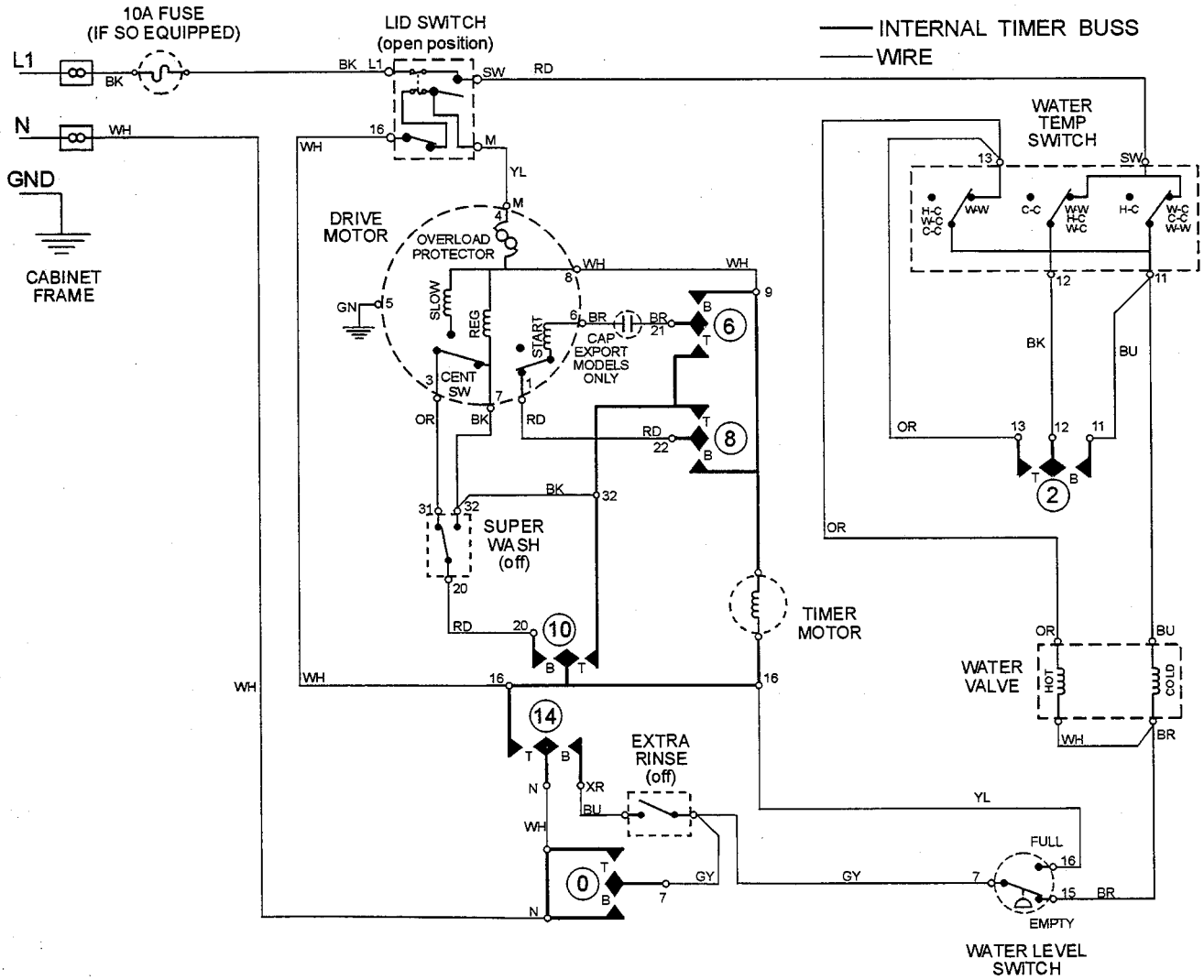

6 2607790

©2000 Maytag Appliances Sales Company

SCHEMATIC MAV7200 MAV7600

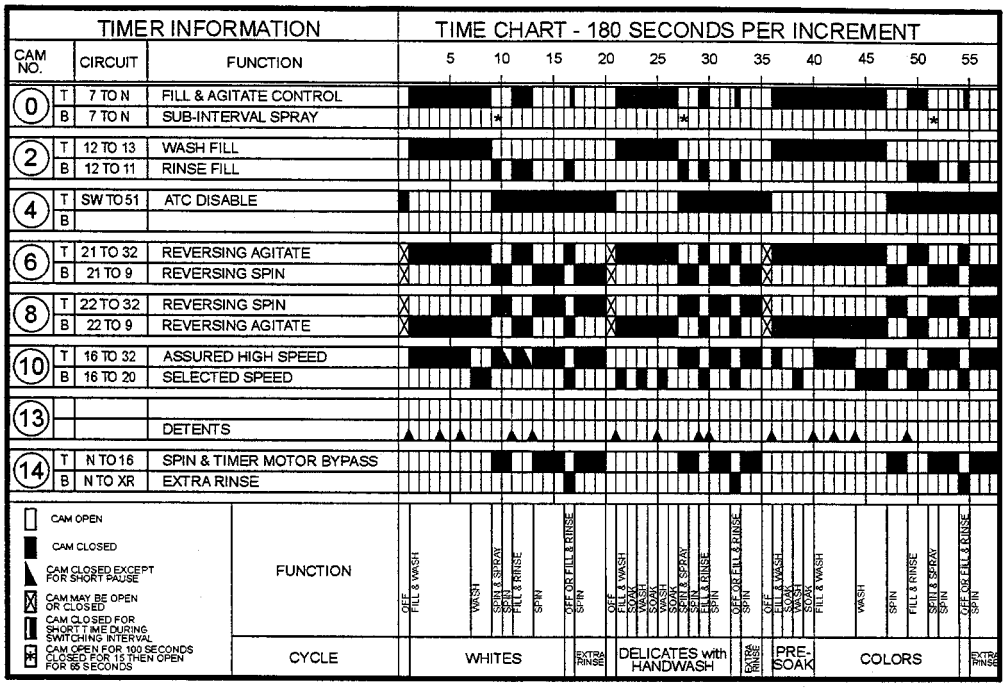

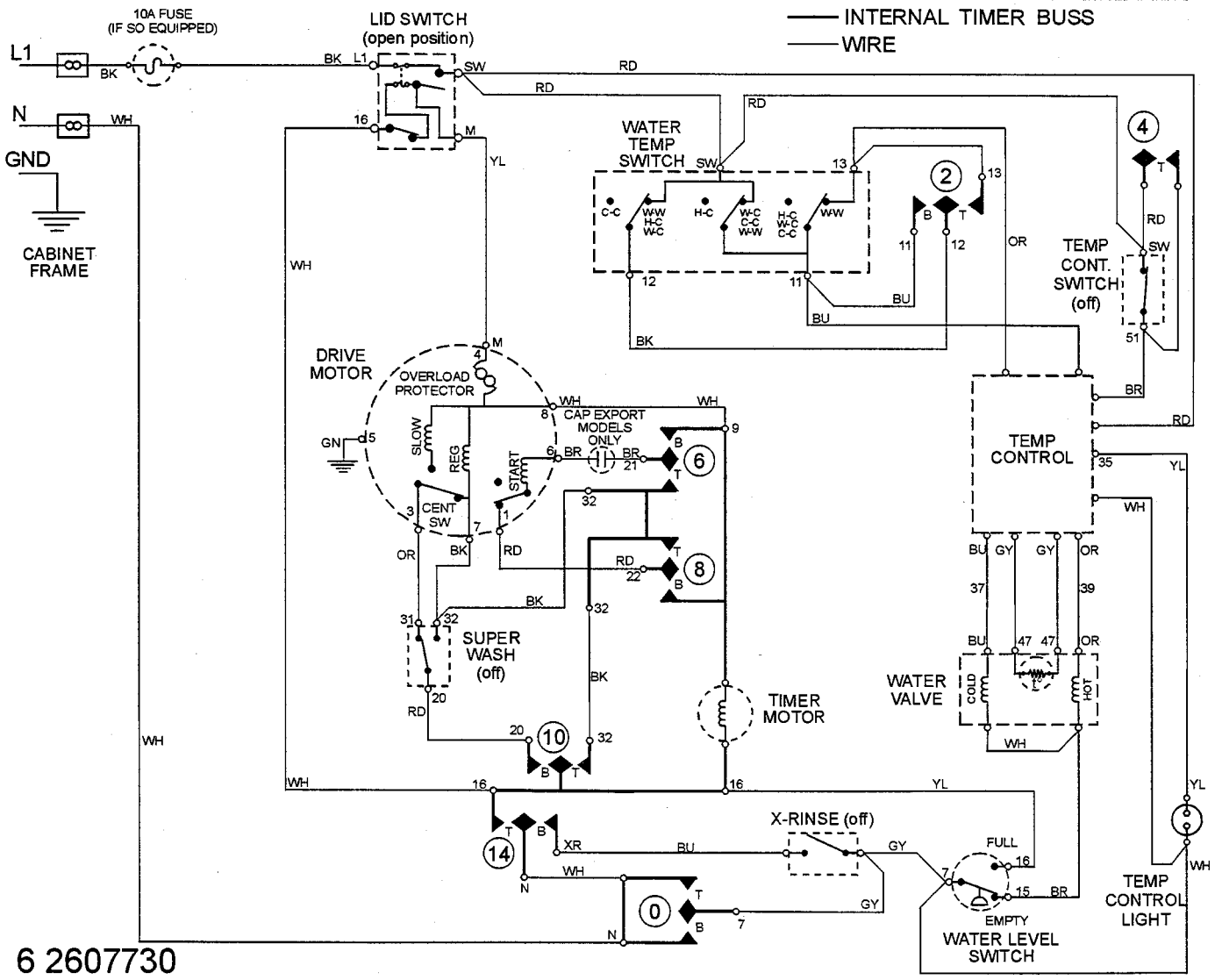

6 2607730

©2000 Maytag Appliances Sales Company

SCHEMATIC MAV7700

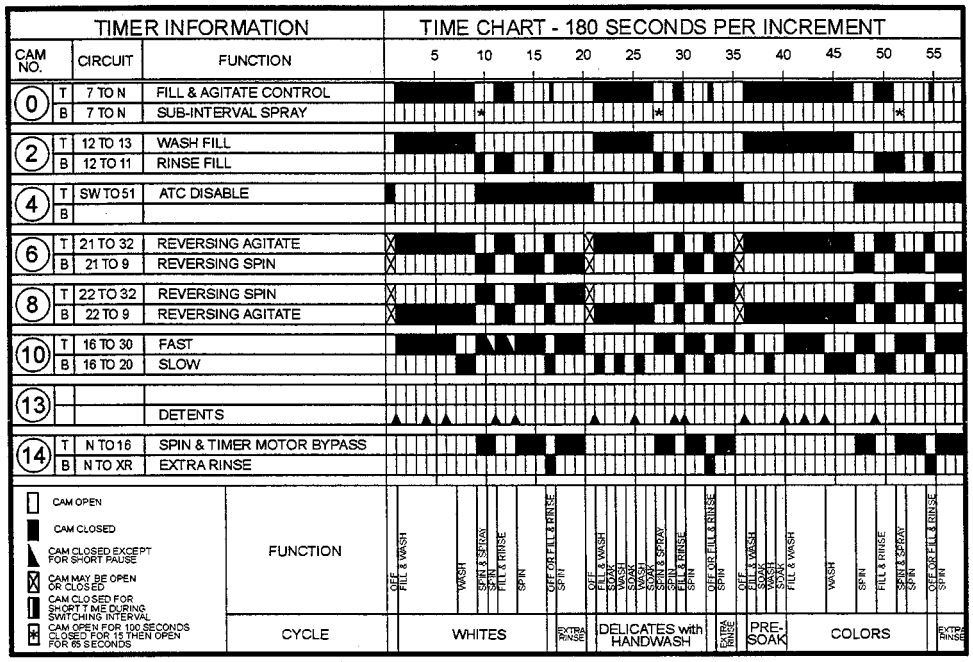

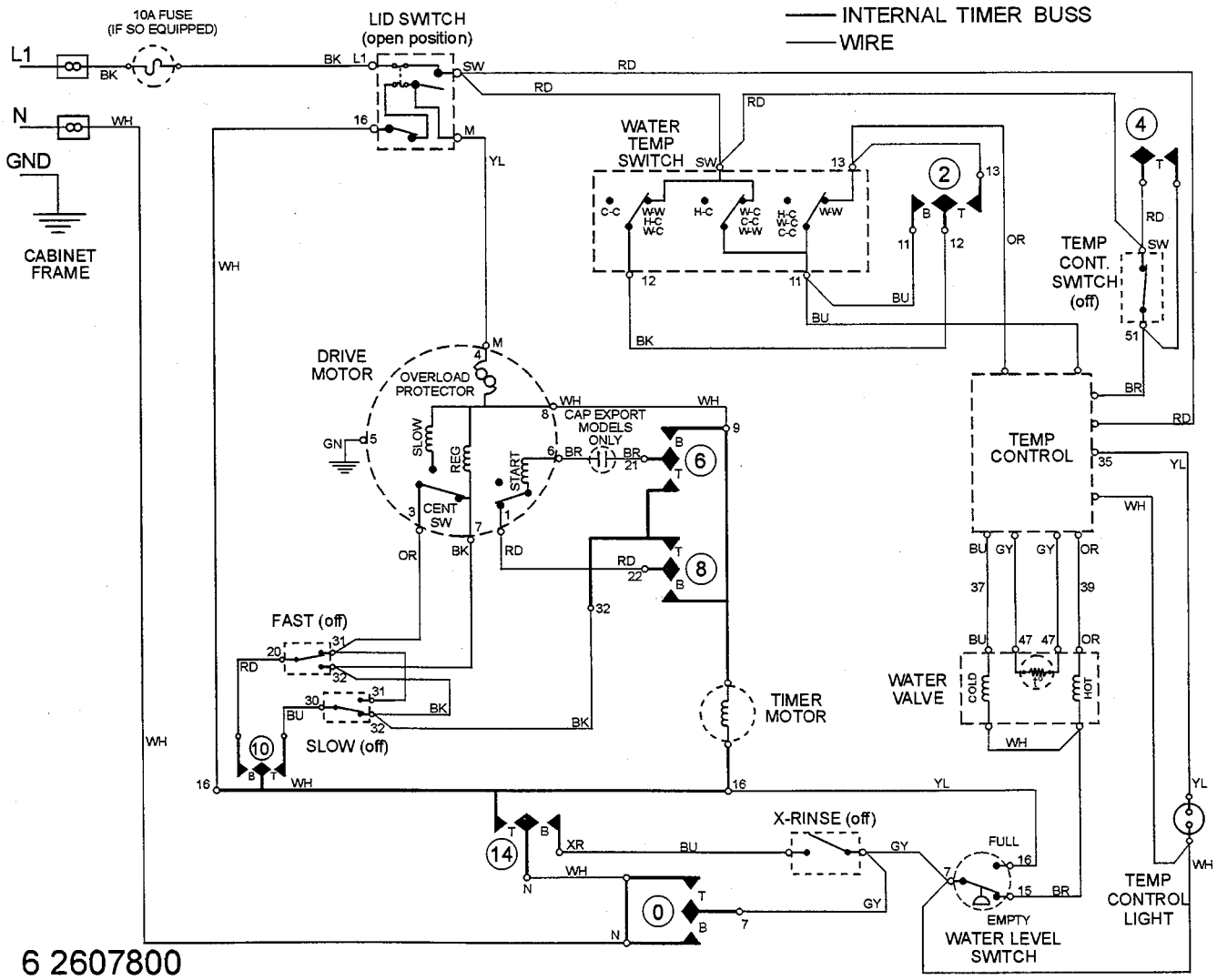

6 2607800

©2000 Maytag Appliances Sales Company

SCHEMATIC MAV8600

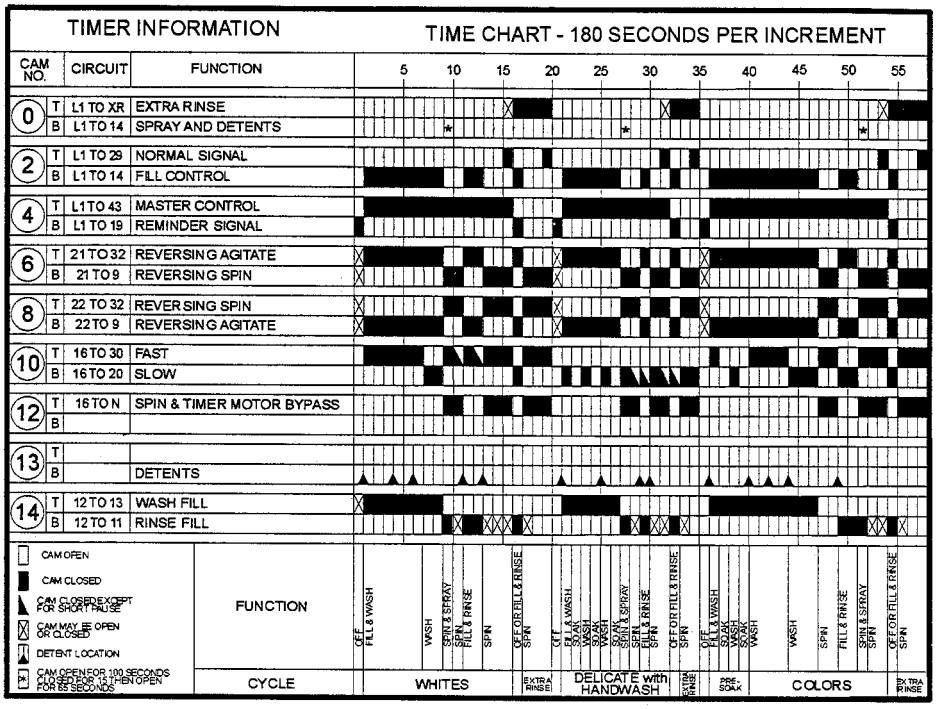

INTERNAL TIMER BUSS
WIRE

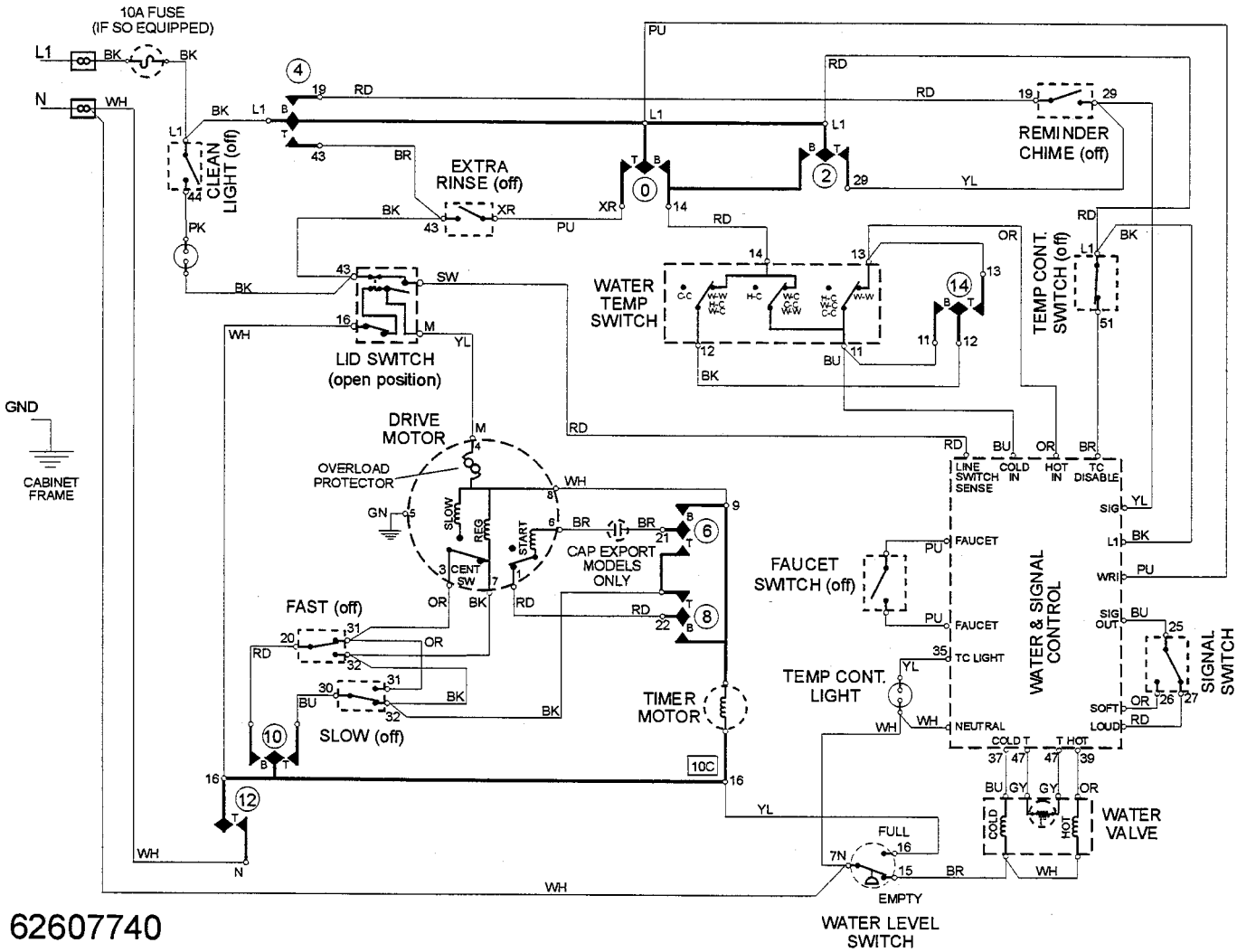

62607740

16010280
(16009485-02)

©2000 Maytag Appliances Sales Company

SCHEMATIC MAV9600

CAM NO.	CIRCUIT		FUNCTION
0	T	7 TO N	FILL & AGITATE CONTROL
	B	7 TO N	SUB-INTERVAL SPRAY
2	T	12 TO 13	WASH FILL
	B	12 TO 11	RINSE FILL
4	T		NOT USED
	B		
6	T	21 TO 32	REVERSING AGITATE
	B	21 TO 9	REVERSING SPIN
8	T	22 TO 32	REVERSING SPIN
	B	22 TO 9	REVERSING AGITATE
10	T	16 TO 32	ASSURED HIGH SPEED
	B	16 TO 20	SELECTED SPEED
14	T	N TO 16	SPIN & TIMER MOTOR BYPASS
	B	N TO XR	EXTRA RINSE

TIME CHART - 180 SECONDS PER INCREMENT (5, 10, 15, 20, 25, 30, 35, 40, 45, 50)

CAM OPEN
CAM CLOSED
CAM CLOSED EXCEPT FOR SHORT PAUSE
CAM MAY BE OPEN OR CLOSED
CAM CLOSED FOR SHORT TIME DURING SWITCHING INTERVAL
CAM OPEN FOR 100 SECONDS CLOSED FOR 15 THEN OPEN FOR 65 SECONDS

FUNCTION: OFF, FILL & WASH, WASH, SPIN & SPRAY, SPIN, FILL & RINSE, SPIN, OFF OR FILL & RINSE, SPIN, OFF, FILL & WASH, SOAK, WASH, SOAK, WASH, SOAK, SPIN & SPRAY, SPIN, FILL & RINSE, SPIN, OFF OR FILL & RINSE, SPIN, OFF, FILL & WASH, WASH, SPIN, FILL & RINSE, SPIN & SPRAY, SPIN, OFF OR FILL & RINSE, SPIN

CYCLE: WHITES; EXTRA RINSE; DELICATES with HANDWASH; EXTRA RINSE; COLORS; EXTRA RINSE

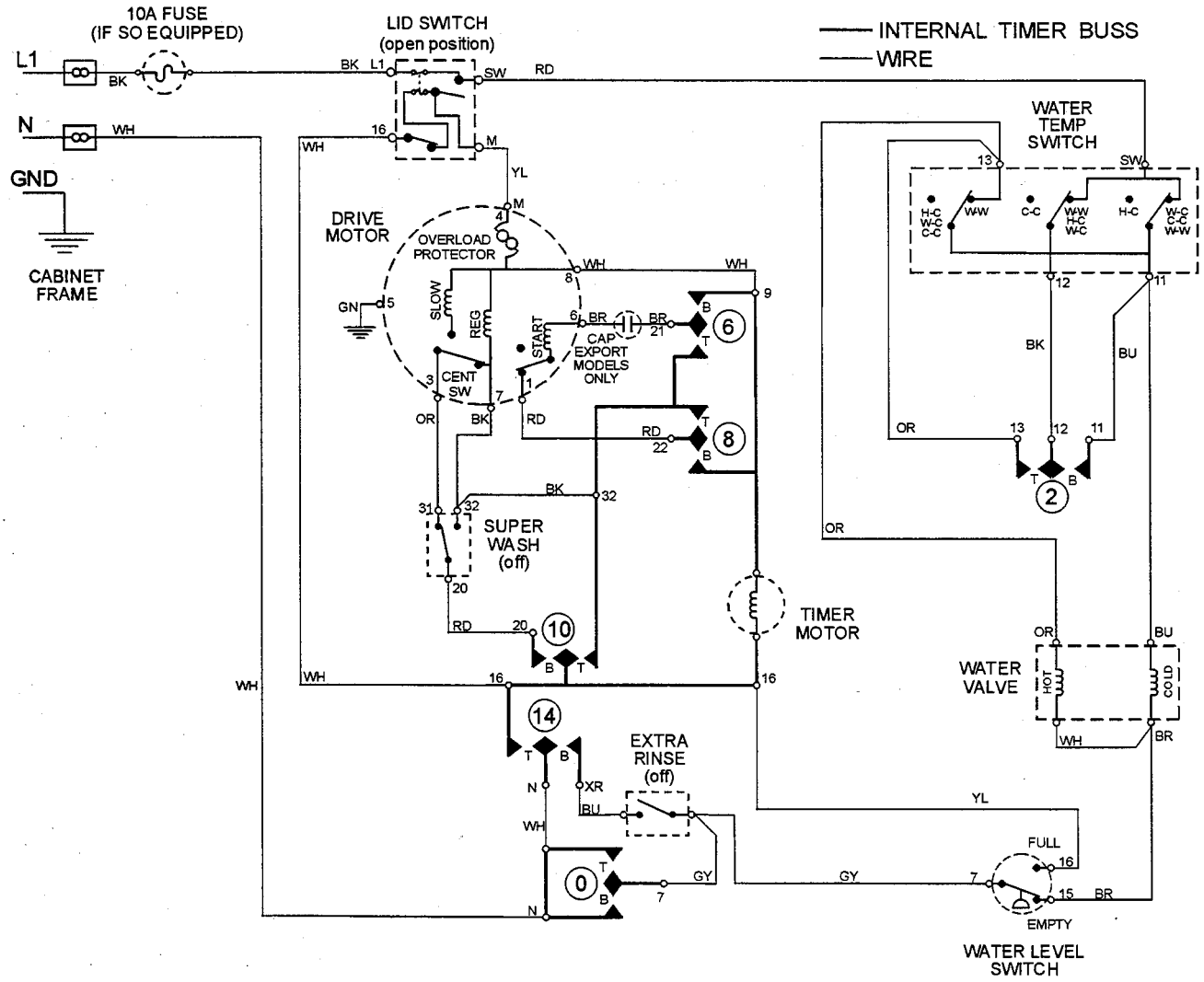

6 2607790

©2000 Maytag Appliances Sales Company

INTRODUCTION

Attached is Supplement three for service manual 16009485. This Maytag Washer Service Manual supplement covers *Atlantis III Models*. We suggest you file this with your 16009485 Manual for reference.

CONTENTS

SECTION 1. Product Definition 2
SECTION 2. Console 2
SECTION 3. Automatic Temperature Control 3
SECTION 4. Water Valves 3
SECTION 5. Front Removal 4
SECTION 6. Pump Assembly 4
SECTION 7. Tub Seal and Bearing 4

To locate an authorized servicer, please consult your telephone book or the dealer from whom you purchased this product. For further assistance, please contact:

Customer Service Support Center

CAIR Center

Web Site	Telephone Number
WWW.AMANA.COM	1-800-843-0304
WWW.JENNAIR.COM	1-800-536-6247
WWW.MAYTAG.COM	1-800-688-9900
CAIR Center in Canada	1-800-688-2002
Amana Canada Product	1-866-587-2002

©2002 Maytag Appliances Company

Section 1. Product Definition:

The Atlantis III is similar to previous Atlantis washer models, with the following exceptions:

- The Control Wire Harness has a connector which allows removal of the entire Console Assembly from the cabinet.
- Automatic Temperature Control. The incoming water temperature is controlled by 2 thermostats attached to the Injector Assembly.
- A new non-serviceable water pump.

Section 2. Console

Disassembly and Testing

The Console Assembly has been designed to allow full removal of the console from the cabinet via a plug added to the wiring harness. This feature will also aid in performing diagnostic tests to the various components.

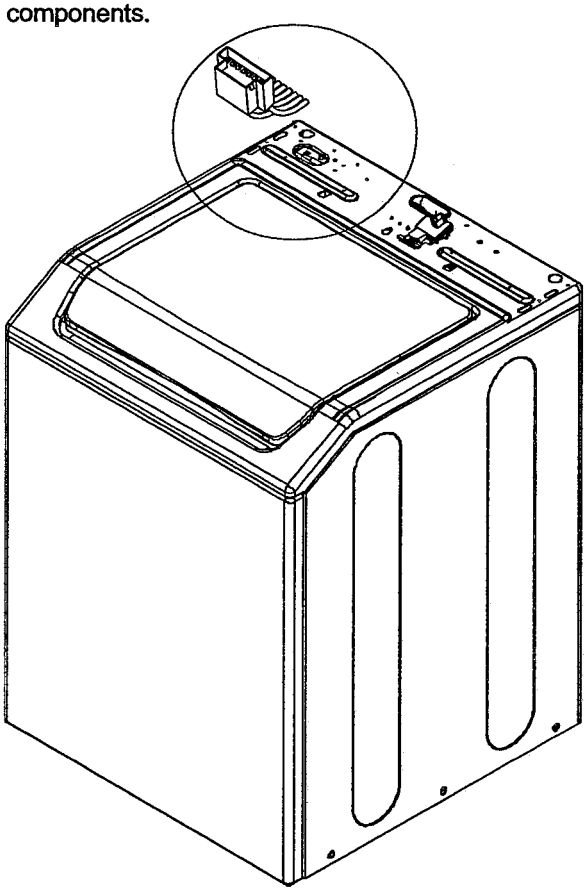

Motor Resistance

Main Winding

Attach Ohm Meter leads to WH 9 and BK 32 2 ohms.

Start Winding

Attach Ohm Meter leads to BR 21 and RD 22 4 ohms.

Centrifugal Switch

Attach Ohm Meter leads to BK 32 and OR 31 .5 ohms.

Overload

Attach Ohm Meter leads to WH 9 and YL M .5 ohms.

Water Valves

Hot

Attach Ohm Meter leads to OR 13 and BR 15 1 ohm.

Cold

Attach Ohm Meter leads to BU 11 and BR 1 ohm.

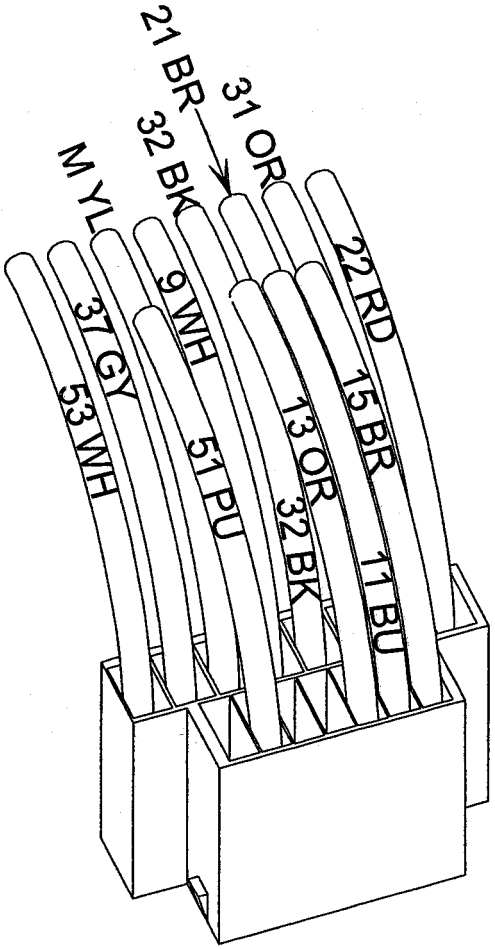

Lower harness shown from wire insertion side

©2002 Maytag Appliances Company

Section 3. Automatic Temperature Control

ATC Functionary

The nozzle of the water valve directs the incoming water over two thermostats mounted onto the upper injector assembly. One of the thermostats controls the cold water valve, and the other controls the hot water valve.

When ATC cold wash is selected:
The cold water valve is opened for full cold fill. If the incoming water temperature is below approximately 65°F, the hot water valve will open and warm the incoming water. The hot water valve will continue to cycle on and off maintaining optimum cold water temperature until the tub is full. The target water temperature for a cold wash is 70°F to 80°F.

When ATC warm wash is selected:
The hot water valve is opened for full hot fill. If the incoming water temperature is above approximately 100°F, the cold water valve will open and cool the incoming water. The cold water valve will continue to cycle on and off maintaining optimum warm water temperature until the tub is full. The target water temperature for a warm wash is 90°F to 100°F.

ATC is not active during rinse or hot wash.

Section 4. Water Valves

Water Valve Access

Water valve access is gained by lifting the top assembly. The water valve is located just behind the Automatic Temperature Control Assembly and mounted to the back cabinet wall. To remove the water valve. Disconnect water lines and remove one screw on the left side of the water valve mounting bracket. Slide bracket to the left and remove.

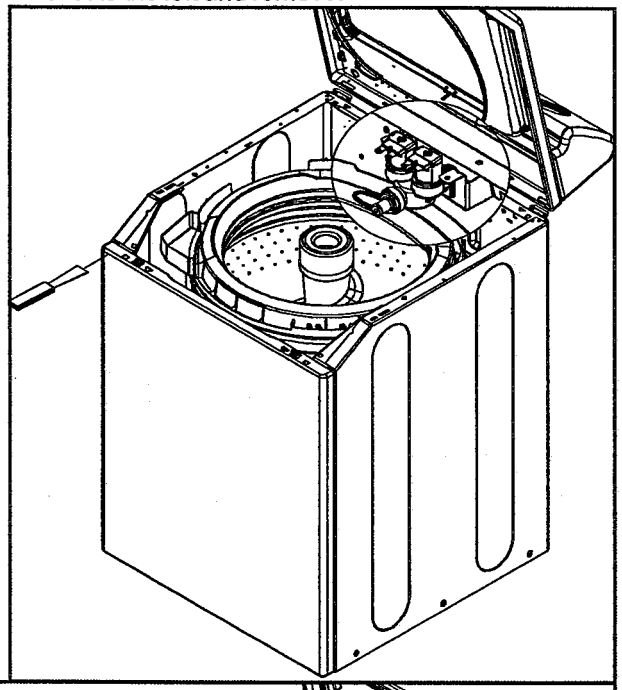

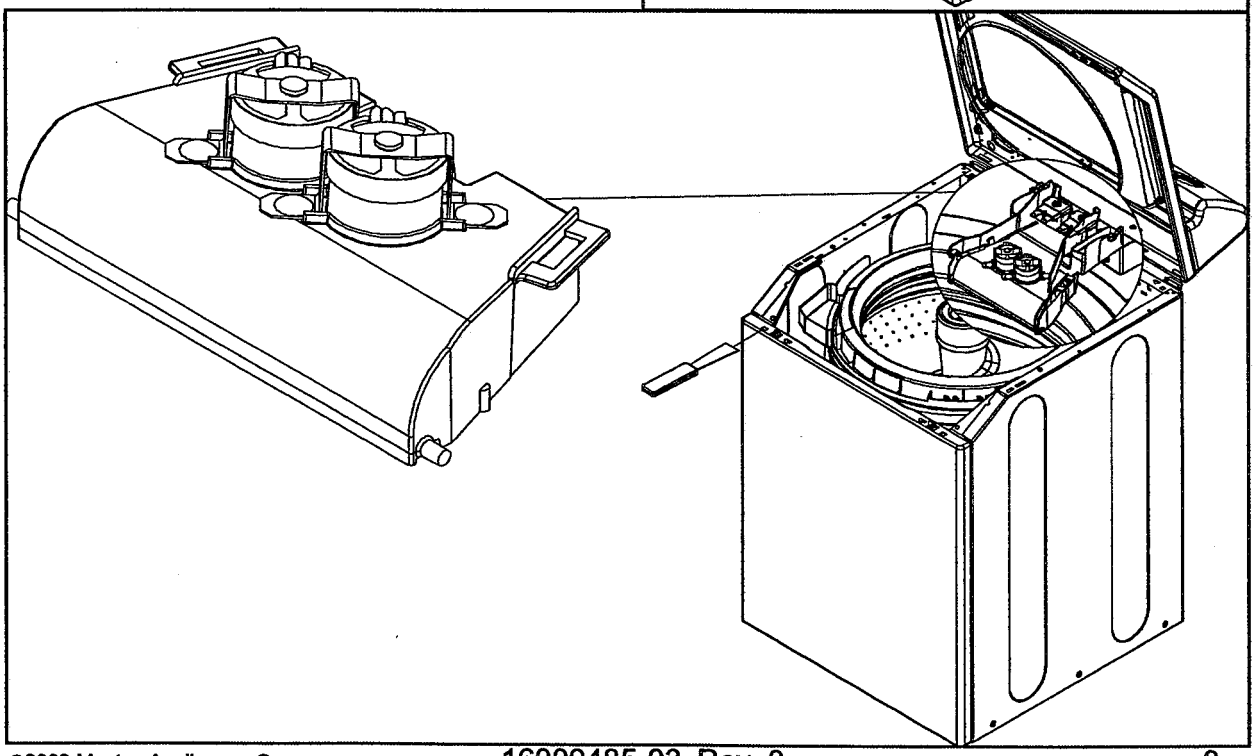

Section 5. Front Removal

Procedure

Lift Top Assembly by releasing spring clips between top and front panel. Use a plastic putty knife to disengage clip. Lift top and remove top screws through the back of the Front Panel. There are two spring clips a screws one each side.

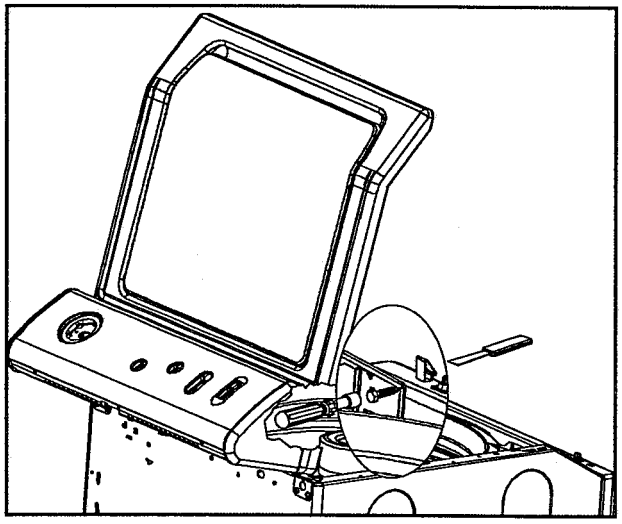

Section 6. Pump Assembly

Atlantis washers use a new pump assembly which will be totally replaced should it require repair. A pump kit will be available containing the entire pump assembly.

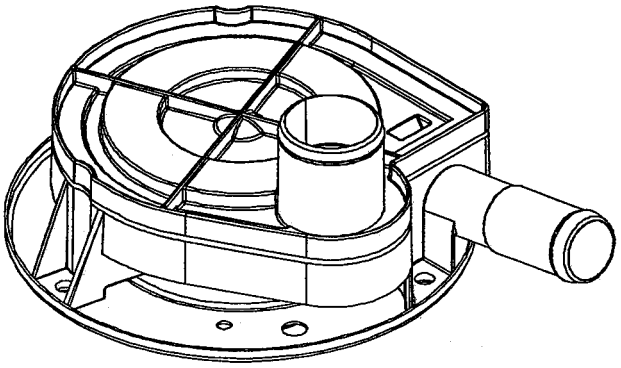

Section 7. Tub Seal and Bearing

The Atlantis III Seal and Bearing are unique and are matched to the duel drive high torque transmission, used on this washer. When replacing the seal and bearing, order parts specific to the Atlantis III washer. The seal and bearing used on older models will not fuction properly. The seal kit will also be supplied with the replacement transmission assembly if it is necessary to install a new one.

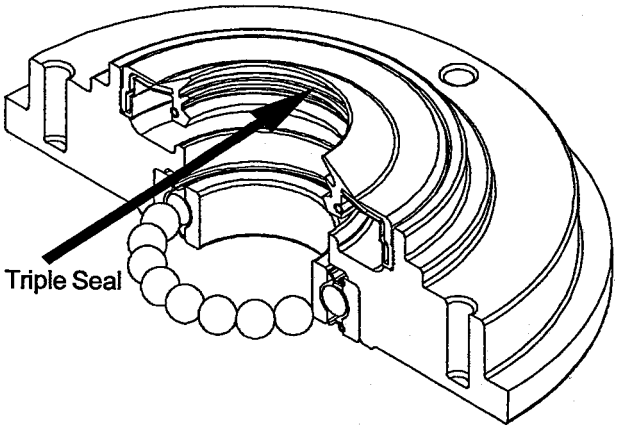

©2002 Maytag Appliances Company

MAYTAG

Maytag Appliances Sales Company

Customer Service
240 Edwards St.
Cleveland, TN 37311